

AQUARA

by THG Paris

CATALOGUE
2026



AQUARA

by THG Paris

CATALOGUE 2026

In response to current trends and evolving customer expectations, THG Paris has developed a collection of contemporary, elegant, minimalist and fashion-forward products.

True to the brand's DNA and committed to the exceptional quality of finish for which it is renowned, this range of bathroom brassware has been deliberately streamlined to offer a selection of essential finishes aligned with today's market, while maintaining a broad choice of products to suit every requirement.

We are confident that our AQUARA collection will meet your expectations.

David Bonnelle
CEO



SUMMARY



ALOSE 16

Basin....20
Bath....27
Shower....34
Bidet....55
Accessories....56



ESTRAN 60

Basin....64
Bath....71
Shower....80
Bidet....101
Accessories....102



OBIONE 106

Basin....110
Bath....114
Shower....122
Bidet....142
Accessories....143



OYAT 148

Basin....152
Bath....156
Shower....167
Bidet....186
Accessories....187

BASINS 190

ROUGH PARTS 198

THE ALLIANCE OF STYLE AND EXPERTISE

Born in the heart of the THG Paris workshops in Hauts-de-France, AQUARA embodies a new vision of comfort and high-end performance. Designed and developed in France on THG Paris's technical platforms, the brand brings together industrial expertise, exacting quality standards and refined aesthetic precision.

Created for residential and hospitality projects, AQUARA offers a curated, standardised range with uncompromising reliability. Each collection celebrates meticulous craftsmanship, harmonious proportions and exceptional materials, presented in a comprehensive palette selected for its elegance and durability.

Supported by the expertise of a luxury maison, AQUARA by THG Paris represents a new generation of high-end brassware: inspiring, contemporary and designed for today's living environments.





RESPONSIBLE EXPERTISE, BY NATURE

For us, environmental responsibility is embedded from the very earliest stages of product design. This commitment is reflected in tangible actions throughout the manufacturing process.

The company is driven by strong, long-standing initiatives: roofs fitted with photovoltaic panels, full recycling of the brass we use, widespread adoption of LED lighting, and 100% recycling of water consumed during production.

We have also implemented an advanced surface treatment system that has enabled us to maintain an exemplary record, with zero metal discharge into the environment for over 20 years.





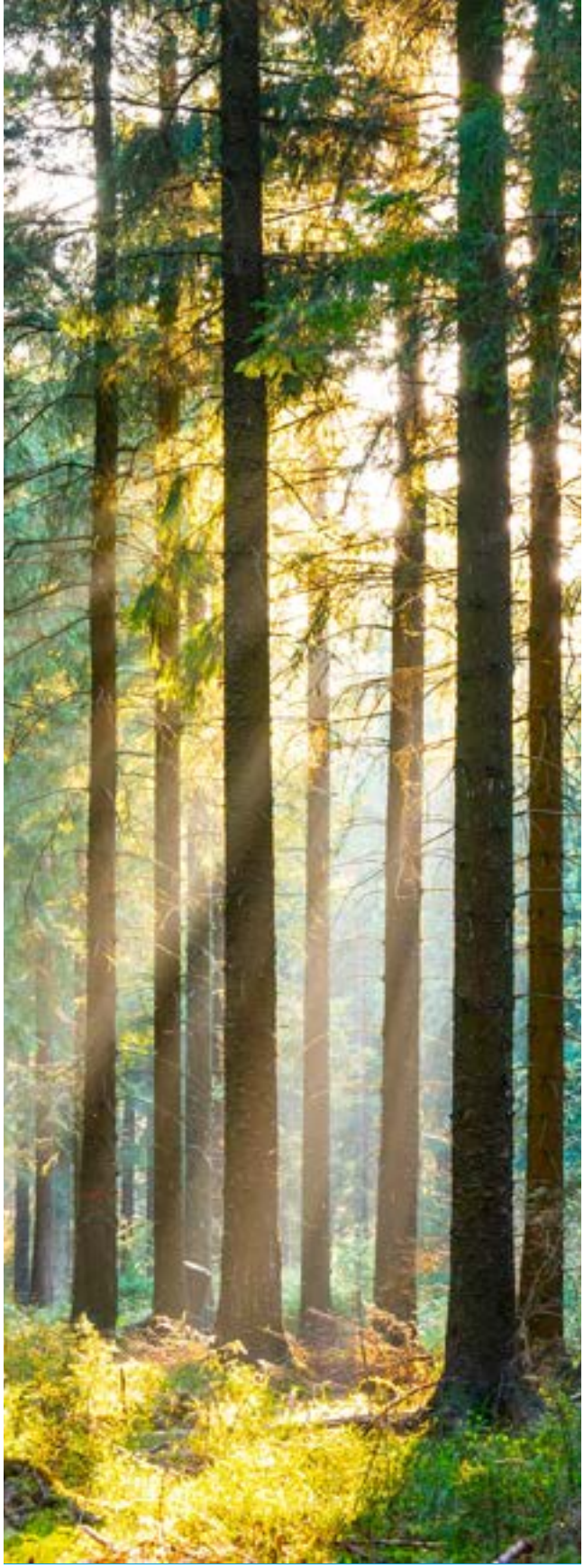

SUSTAINABLE AND RESPONSIBLE PRODUCTS

Rooted in the world of the bathroom, our AQUARA collection brings together products that are both environmentally responsible and economical in use.

We attach the utmost importance to the performance, durability and aesthetics of our creations, while safeguarding user health and protecting the environment.

AQUARA guarantees high-quality products, developed with water conservation in mind and manufactured using environmentally responsible materials.

BRASS, A MATERIAL OF EXCEPTIONAL QUALITIES

Brass is a noble material offering numerous advantages:

- Excellent mechanical strength
- Outstanding corrosion resistance
- Natural antibacterial properties
- The ability to achieve refined, high-quality finishes

LEAD-FREE BRASS

The bodies of our taps are manufactured from 100% lead-free brass.

Committed to protecting both our customers' health and the environment, we go beyond current standards by exclusively using lead-free brass composed of more than 90% recycled material and fully recyclable at the end of its service life.

In the interest of user health, all brass components that come into contact with drinking water are entirely lead-free.

CONTROLLED WATER CONSUMPTION

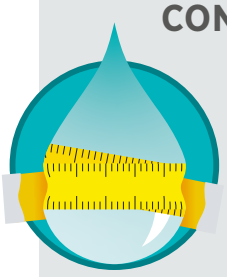

All shower heads, hand showers and taps within our AQUARA collection are fitted with flow regulators. This technology reduces water consumption while ensuring optimum comfort in use, thanks to the injection of air microbubbles into the water stream.

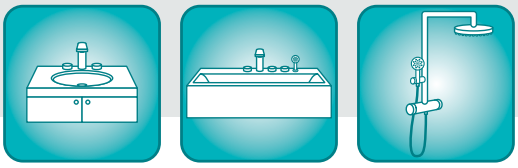

COMFORT AND QUALITY WITH OUR EASY CLEAN SYSTEM

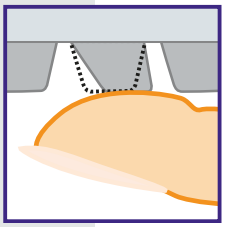

All our shower heads and hand showers feature anti-limescale silicone nozzles, ensuring effortless maintenance, enhanced durability by limiting limescale build-up, consistent spray performance with unobstructed nozzles, optimal hygiene, and preserved aesthetics. At AQUARA, it is these details that make all the difference, combining comfort, longevity and elegance down to the smallest finish.

EASYCLEAN



NEW-GENERATION MIXER TAPS: ECONOMICAL AND SAFE

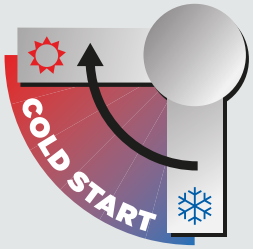

ECONOMICAL - Our rim-mounted basin mixer taps are fitted with high-quality ceramic disc cartridges. In the central position, the tap delivers cold water; turning the handle clockwise activates hot water. The **COLD START** system helps reduce energy consumption by drawing hot water only when required.

SAFE - AQUARA mixer taps are equipped with the **OPTIMIX** system, which includes a repositionable maximum temperature stop for customised adjustment. This feature ensures user safety by preventing scalding, while also optimising energy use by avoiding excessively hot water.

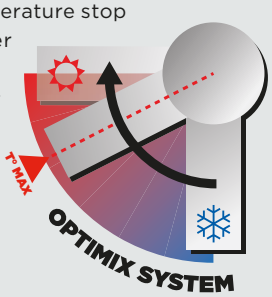

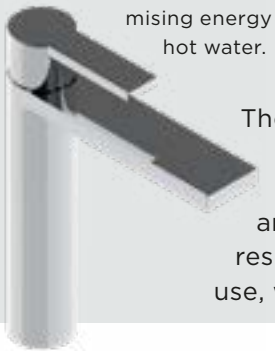

These innovative functions promote economical and environmentally responsible water and energy use, while guaranteeing optimal comfort.

THERMO COOL CONTACT: DAILY SAFETY



The “cold body” design of exposed shower and bath taps, with the thermostatic control positioned on the left, prevents any risk of burns from contact with the tap body.



EASY FIX

Our basin and bidet mixer taps feature the **EASY FIX** system, allowing them to be securely tightened by hand without the need for tools, ensuring quick and effortless installation.





OUR THERMOSTATS COMBINE PERFORMANCE, RELIABILITY AND EASY INSTALLATION

Thanks to their modular design, every component - whether recessed or exposed - is rigorously tested to ensure optimal quality.

Optimal Protection Guaranteed

Each thermostatic body is housed within a watertight box equipped with a moulded rubber membrane. The water inlets are fitted with integrated non-return valves, providing enhanced safety and operation without backflow, in compliance with water quality and pollution protection standards.

Carefully Designed Plates

The cover plates are made of brass, ultra-thin (4 mm) and free of visible screws, ensuring a sleek, refined appearance.

The range includes two plate options:

- Knobs coordinated with the collection
- Push-button controls

Easy Installation and Maintenance

Our thermostats are delivered ready for installation. The square-shaped box facilitates accurate level alignment and simplifies fitting.

A Wide Range of Configurations

Shower and bath packs are available with up to three functions, providing a wide variety of configurations to suit different requirements.

Precise Temperature Control

At the heart of the system lies a thermostatic cartridge with a wax element, enabling precise and reliable temperature control.

NEW-GENERATION FLUSH-MOUNTED UNITS

- Easy restoration of wall seals
- Precise temperature control
- Simple installation
- Multiple fixing points
- Integrated non-return valves

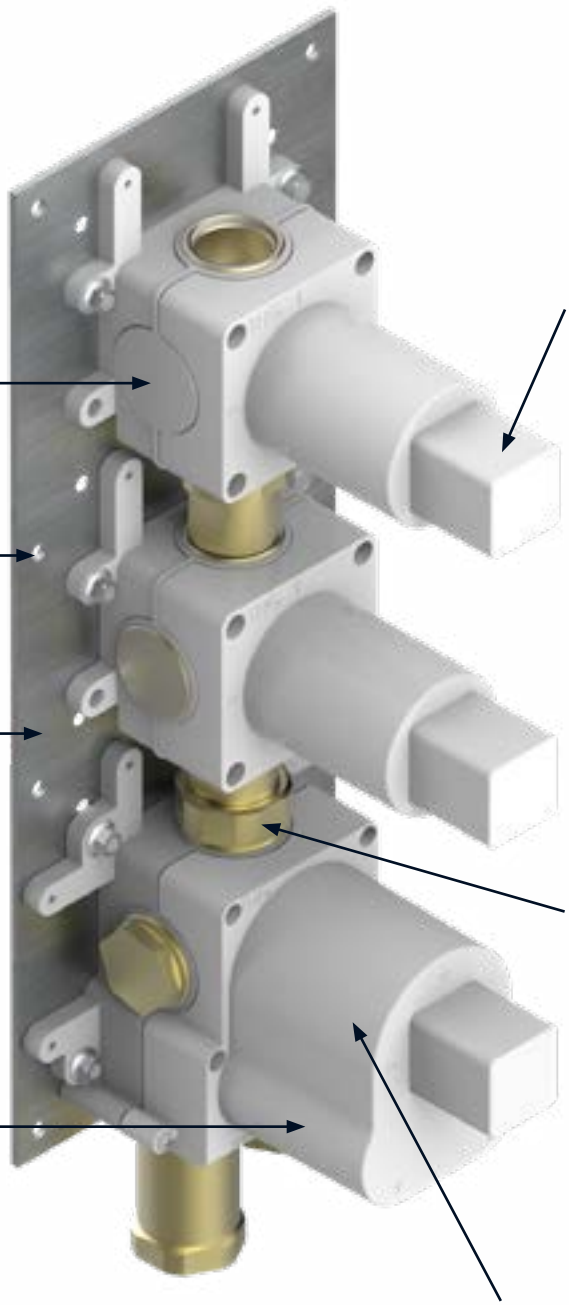

Cubes for easy levelling and plumb alignment

Moulded rubber membrane

Simple screw fixings

Flat surface

Lead-free brass construction

Watertight casing

Clear markings for hot and cold water inlets

Thermostatic cartridge with wax element

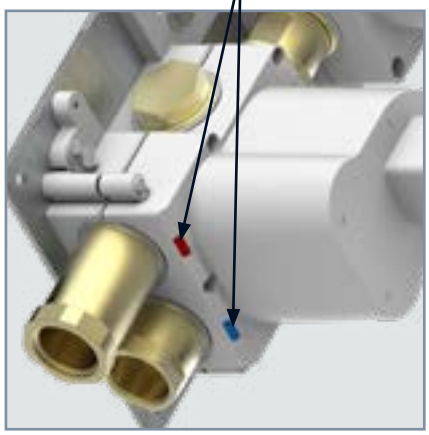

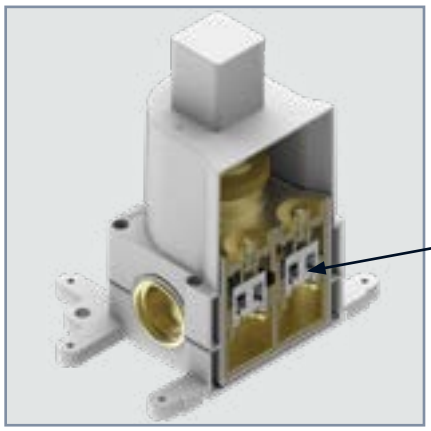

Integrated non-return valve

CERTIFIED MANUFACTURING

STRICT COMPLIANCE WITH FRENCH HEALTH STANDARDS

Each product is designed and manufactured in full compliance with regulatory requirements.

All our equipment rigorously meets current technical and health standards and certifications, in particular the NF (French Standard) and ACS (Attestation of Sanitary Conformity).

These certifications ensure that our products are fully suitable for contact with water intended for human consumption, without any risk of contamination or compromise in quality. They reflect our ongoing commitment to safety, material excellence and adherence to the highest standards in the industry.

THE NF STANDARD: A GUARANTEE OF QUALITY AND PERFORMANCE

We have chosen to obtain voluntary NF certification, in particular the NF 077 standard, dedicated to sanitary taps and fittings.

This French certification attests to the quality, reliability and performance of our products, going well beyond regulatory requirements. It ensures compliance with stringent criteria covering dimensions, watertightness, hydraulic performance, mechanical strength, durability, and even acoustic performance.

Aligned with European standards, the NF certification enhances installation safety and demonstrates our ongoing commitment to excellence. These criteria are regularly verified through product testing in an approved laboratory and through audits of our organisation.

ACS: AN ESSENTIAL CERTIFICATION FOR WATER QUALITY

We place particular emphasis on ensuring that our products comply with strict health requirements.

The ACS (Attestation of Sanitary Conformity) standard is a key certification in France for all taps and fittings. It guarantees that materials in contact with water intended for human consumption do not compromise its quality in any way.

Since December 2006, this certification has been a legal requirement, and all products in contact with drinking water in France must carry ACS certification. We therefore ensure full compliance with this standard to guarantee our customers the highest levels of health and safety.

HQE, LEED AND BREEAM: TAPS THAT SUPPORT ENVIRONMENTAL PERFORMANCE

The HQE (High Environmental Quality), LEED and BREEAM standards apply to the construction of sustainable buildings, focusing on environmental performance and occupant comfort.

For taps and fittings, these standards promote the use of water-saving devices, helping to reduce water consumption and preserve resources. Upon request, we can provide products that comply with these requirements.

ELEGANT FINISHES

8 FINISHES TO ENHANCE THE AQUARA COLLECTIONS

The AQUARA collections are distinguished by the variety of their finishes, offering eight high-quality options to meet the most exacting standards.

Surface treatment involves applying a layer of metal or organic coating to the various components. This process both protects and enhances the part, improving its durability and appearance. For each collection in this catalogue, finishes are available in either classic or PVD treatment.

PVD TREATMENT

PVD (Physical Vapour Deposition) treatment is a process in which ultra-thin layers are physically deposited onto components using vapour.

Widely employed in highly demanding industries such as watchmaking, jewellery, optics and aerospace, PVD treatment creates a durable, precise colour finish, combining aesthetic appeal with long-lasting resistance.

PVD Treatment Process

This technology involves vapourising a metal, which is then deposited onto the components using an ion plasma. Under vacuum and high pressure, the parts are heated to approximately 180°C. High-intensity magnetic fields draw metal ions from metal plates, which are electrically attracted to and adhere to the surfaces of the parts, colouring them in the process.

Five PVD finishes are available for the AQUARA collections:

- Nickel color PVD, reference H55
- Matt nickel color PVD, reference H56
- Brass color PVD, reference H49
- Matt brass color PVD, reference H50
- Matt Umber PVD, reference H67



H55 Nickel PVD

H56 Matt nickel PVD

H49 Brass PVD

H50 Matt brass PVD

H67 Matt umber PVD

CLASSIC TREATMENT

Classic electrolytic treatment consists of several successive layers, each providing specific properties.

The three classic finishes available for the AQUARA collections are:

- Chrome, reference A02
- Nickel, reference B01
- Black ceram, reference D30

Black ceramic is an exceptionally durable finish that delivers an elegant, contemporary, high-end appearance. It is impervious to oxidation or tarnishing, even in humid or corrosive environments. Its smooth, non-porous surface resists dirt and staining, making it extremely easy to clean with a simple damp cloth.



A02 Polished chrome

B01 Polished nickel

D30 Black ceram

Advantages of PVD Treatment

- Enhanced overall coating hardness and abrasion resistance
- Excellent corrosion resistance thanks to nickel and chromium undercoats
- Easy maintenance
- Wide range of colours available
- Environmentally responsible

These benefits make PVD coatings the ideal choice for our bathroom fittings and accessories, providing both lasting aesthetic appeal and exceptional durability.

FOUR COMPLETE COLLECTIONS

Discover our four bathroom fittings and accessories collections - Estran, Oyat, Alose and Obione - where timeless design meets innovation.

Meticulously crafted, these collections integrate seamlessly into exceptional interiors and are suitable for a wide range of projects, from residential homes to luxury hotels.

Each collection has been designed to balance aesthetics and functionality, providing stylish, durable solutions for every bathroom.

Contemporary and Innovative Design

- Round or square profiles
- Complete bathroom range
- Coordinated accessories
- Eight finishes to choose from
- Quality, reliability and longevity
- Collections in stock for prompt delivery



ALOSE

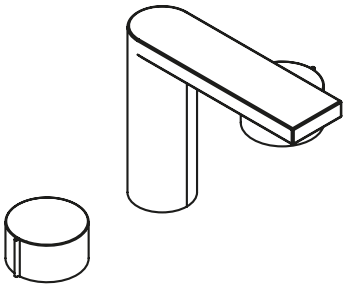





ESTRAN

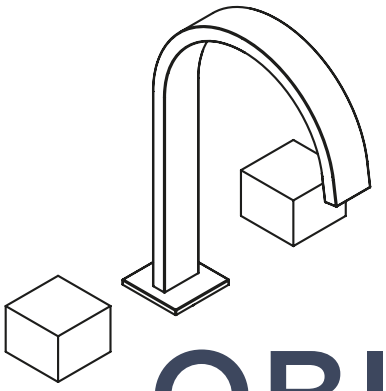

OBIONE

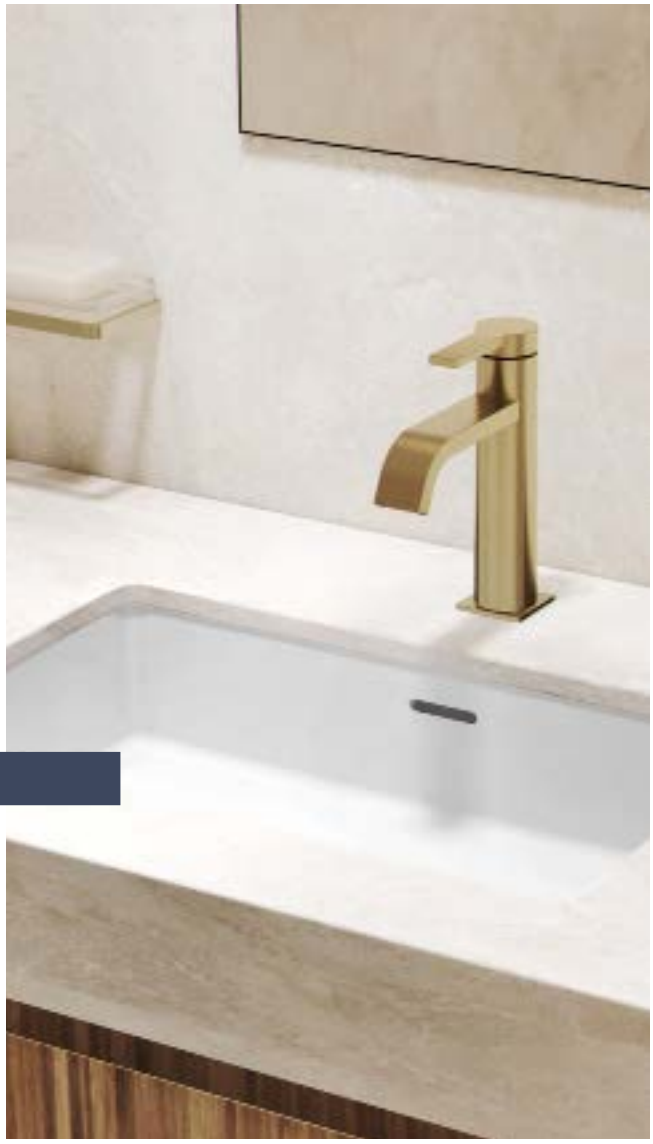





OYAT

CREATE YOUR BATHROOM WITH EASE

1 CHOOSE A COLLECTION



P1E
Alose

P1C
Estran

P1B
Obione

P1A
Oyat

2 SELECT YOUR PRODUCTS

Products are organised by category: washbasin, bath, shower, bidet/WC and accessories.

BASIN



P1E.151

Rim mounted 3-hole basin mixer with waste

- **Low-lead brass**
- **Supplied with 1¼" click waste**
- **Overall height: 135 mm - Maximum spout projection: 125 mm**
- **Flowrate: 8.4L/min at 3bar**

1 **2** **3**

P1E.151.A02 | P1E.151.B01 | P1E.151.D30 | P1E.151.H49
P1E.151.H50 | P1E.151.H55 | P1E.151.H56 | P1E.151.H67

REFERENCE = 1 collection + 2 item + 3 finish

3 CHOOSE YOUR FINISH



A02
Polished chrome

B01
Polished nickel

D30
Black ceram

H55
Nickel PVD

H56
Matt nickel PVD

H49
Brass PVD

H50
Matt brass PVD

H67
Matt umber PVD

4 ADD A BASIN AND A WASTE



Perfectly suited to contemporary bathrooms, our porcelain countertop or built-in basins blend seamlessly with our collections.



The AQUARA range also includes a selection of matching wastes in the same finish as the taps.

À LA CARTE BATH AND SHOWER PACKS

1 CHOOSE YOUR CONFIGURATION

Bath or shower, 1, 2 or 3 functions, coordinated with your washbasin, push-button control, etc.

3-FUNCTION THERMOSTATIC SHOWER SETS







- Trim for thermostatic mixer with 3 outlets
- Stainless steel wall-mounted shower water blade
- Showerhead Ø300 mm with shower arm of your choice
- Set with single-jet hand shower and holder of your choice

PRODUCT INFORMATION

- Brass
- 130x445 mm plate
- Brass showerhead with EASY CLEAN nozzles Flowrate: 9.5L/min at 3bar
- Wall-mounted shower water blade flowrate: 17L/min at 3bar
- 1.5 m Soft Touch silicone hose
- Brass single-jet hand shower with EASY CLEAN nozzles Flowrate: 8L/min at 3bar

Model shown ref. P1E.V3MH5CL.D30

PLEASE NOTE: FOR PACKS ORDERED IN FINISHES A02 AND B01, THE WATER BLADE WILL BE DELIVERED IN A POLISHED STAINLESS STEEL FINISH.



TO ORDER WITH ROUGH PART:

G00.THMV3H

TECHNICAL DETAILS SEE P.203



EXTENSION AVAILABLE:

G00.THAL20

TECHNICAL DETAILS SEE P.207

2 CHOOSE YOUR SHOWER HEAD, HAND SHOWER TYPE, ETC.

Wall or skyshower arm, shower head diameter, skyshower, water blade, hand shower on hook, with shelf, or on slide rail...



Wall arm L450 mm and showerhead Ø300 mm



Hand shower and hook

P1E.V3MH5CL.A02 | P1E.V3MH5CL.B01 | P1E.V3MH5CL.D30 | P1E.V3MH5CL.H49
P1E.V3MH5CL.H50 | P1E.V3MH5CL.H55 | P1E.V3MH5CL.H56 | P1E.V3MH5CL.H67



Hand shower and shelf 300x100 mm

P1E.V3MH5TL.A02 | P1E.V3MH5TL.B01 | P1E.V3MH5TL.D30 | P1E.V3MH5TL.H49
P1E.V3MH5TL.H50 | P1E.V3MH5TL.H55 | P1E.V3MH5TL.H56 | P1E.V3MH5TL.H67



Hand shower on rail L670 mm, centre distance 600 mm

P1E.V3MH5BL.A02 | P1E.V3MH5BL.B01 | P1E.V3MH5BL.D30 | P1E.V3MH5BL.H49
P1E.V3MH5BL.H50 | P1E.V3MH5BL.H55 | P1E.V3MH5BL.H56 | P1E.V3MH5BL.H67

3 ORDER THE CONCEALED MIXER

Our packs are available with a compatible concealed mixer, to be ordered separately.



TO ORDER WITH ROUGH PART:

G00.THMV3H

TECHNICAL DETAILS SEE P.203

4 HAND SHOWER OPTION

If you prefer an ABS multi-spray hand shower instead of the standard ABS 'pen' hand shower supplied with our packs, AQUARA offers an optional alternative.







Collection presented in CERAMIC BLACK finish (D30)

ALOSE

A marine species found in the Baie de Somme, Alose inspires a fluid and refined collection. Its clean lines mirror the movement of water, combining precision, elegance and natural flow.

ALOSE





ALOSE

BASIN



P1E.151

Rim mounted 3-hole basin mixer with waste

- Low-lead brass
- Supplied with 1¼" click waste
- Overall height: 135 mm - Maximum spout projection: 125 mm
- Flowrate: 8.4L/min at 3bar

P1E.151.A02 P1E.151.B01 P1E.151.D30 P1E.151.H49
P1E.151.H50 P1E.151.H55 P1E.151.H56 P1E.151.H67



P1E.6500

Single lever basin mixer with waste

- Low-lead brass
- Supplied with 1¼" click waste
- COLD START ceramic cartridge with temperature stop and EASY FIX system
- Overall height: 169 mm - Maximum spout projection: 125 mm
- Flowrate: 8.4L/min at 3bar

P1E.6500.A02 P1E.6500.B01 P1E.6500.D30 P1E.6500.H49
P1E.6500.H50 P1E.6500.H55 P1E.6500.H56 P1E.6500.H67

P1E.6500SV

Single lever basin mixer without waste

- FEATURES: SEE ABOVE



P1E.6500SV.A02 P1E.6500SV.B01 P1E.6500SV.D30 P1E.6500SV.H49
P1E.6500SV.H50 P1E.6500SV.H55 P1E.6500SV.H56 P1E.6500SV.H67



P1E.6500D

Single lever basin mixer with waste, medium size

- Low-lead brass
- Supplied with 1¼" click waste
- COLD START ceramic cartridge with temperature stop and EASY FIX system
- Overall height: 239 mm - Maximum spout projection: 155 mm
- Flowrate: 8.4L/min at 3bar

P1E.6500D.A02 P1E.6500D.B01 P1E.6500D.D30 P1E.6500D.H49
P1E.6500D.H50 P1E.6500D.H55 P1E.6500D.H56 P1E.6500D.H67

P1E.6500DSV

Single lever basin mixer without waste, medium size

- FEATURES: SEE ABOVE

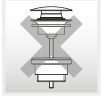

P1E.6500DSV.A02 P1E.6500DSV.B01 P1E.6500DSV.D30 P1E.6500DSV.H49
P1E.6500DSV.H50 P1E.6500DSV.H55 P1E.6500DSV.H56 P1E.6500DSV.H67

ALOSE

BASIN



P1E.6500H

Single lever basin mixer with waste, high model

- Low-lead brass
- Supplied with 1¼" click waste
- COLD START ceramic cartridge with temperature stop and EASY FIX system
- Overall height: 310 mm - Maximum spout projection: 155 mm
- Flowrate: 8.4L/min at 3bar

P1E.6500H.A02 P1E.6500H.B01 P1E.6500H.D30 P1E.6500H.H49
P1E.6500H.H50 P1E.6500H.H55 P1E.6500H.H56 P1E.6500H.H67

P1E.6500HSV

Single lever basin mixer without waste, high model

- FEATURES: SEE ABOVE



P1E.6500HSV.A02 P1E.6500HSV.B01 P1E.6500HSV.D30 P1E.6500HSV.H49
P1E.6500HSV.H50 P1E.6500HSV.H55 P1E.6500HSV.H56 P1E.6500HSV.H67



P1E.40SGB

Trim only for wall mounted 3-hole basin mixer, long spout, without waste

- Low-lead brass
- Maximum spout projection: 220 mm
- Flowrate: 8.4L/min at 3bar





TO ORDER WITH ROUGH PART:

P00.40AM

TECHNICAL DETAILS SEE P.200

P1E.40SGB.A02 P1E.40SGB.B01 P1E.40SGB.D30 P1E.40SGB.H49
P1E.40SGB.H50 P1E.40SGB.H55 P1E.40SGB.H56 P1E.40SGB.H67



P1E.6541SPBL

Trim for wall-mounted built-in basin mixer with long spout, without waste

- Low-lead brass
- Ceramic cartridge with temperature stop
- Maximum spout projection: 220 mm
- Flowrate: 8.4L/min at 3bar





TO ORDER WITH ROUGH PART:

P00.6541SPA

TECHNICAL DETAILS SEE P.200

P1E.6541SPBL.A02 P1E.6541SPBL.B01 P1E.6541SPBL.D30 P1E.6541SPBL.H49
P1E.6541SPBL.H50 P1E.6541SPBL.H55 P1E.6541SPBL.H56 P1E.6541SPBL.H67

ALOSE





ALOSE

BASIN WASTE



P00.316KB

Click waste, supplied with locking kit for free-flowing basin

- **Brass**
- **1¼" connection**

P00.316KB.A02 P00.316KB.B01 P00.316KB.D30 P00.316KB.H49
P00.316KB.H50 P00.316KB.H55 P00.316KB.H56 P00.316KB.H67



P00.309SP

Bottle trap only for waste

- **Brass**
- **Height: min. 80 mm - max. 176 mm**
- **Length 326 mm**
- **Tube Ø32 mm**

P00.309SP.A02 P00.309SP.B01 P00.309SP.D30 P00.309SP.H49
P00.309SP.H50 P00.309SP.H55 P00.309SP.H56 P00.309SP.H67



P00.308TP

Adjustable bottle trap

- **Brass**
- **Height: min. 85 mm - max. 130 mm**
- **Length 326 mm**
- **Tube Ø32 mm**

P00.308TP.A02 P00.308TP.B01 P00.308TP.D30 P00.308TP.H49
P00.308TP.H50 P00.308TP.H55 P00.308TP.H56 P00.308TP.H67



P00.315LP

Adjustable "P" trap

- **Brass**
- **Height: min. 140 mm - max. 196 mm**
- **Length 267 mm**
- **Tube Ø32 mm**

P00.315LP.A02 P00.315LP.B01 P00.315LP.D30 P00.315LP.H49
P00.315LP.H50 P00.315LP.H55 P00.315LP.H56 P00.315LP.H67



ALOSE

BATH



P1E.1132SG

Bath mixer with hand shower supplied by progressive cartridge mixer

- **Brass**
- **Spout: Overall height 165 mm Maximum spout projection: 228 mm**
- **Flowrate: 30L/min at 3bar**
- **1.5 m Soft Touch silicone hose**
- **Brass single-jet hand shower with EASY CLEAN nozzles**
- **Flowrate: 8L/min at 3bar**
- **Manual mixing valve**



TO ORDER OPTIONAL:

P00.5598

Hose reservoir

TECHNICAL DETAILS SEE P.207

P1E.11329G.A02 P1E.11329G.B01 P1E.11329G.D30 P1E.11329G.H49

P1E.11329G.H50 P1E.11329G.H55 P1E.11329G.H56 P1E.11329G.H67



ALOSE

BATH



P1E.6518SB

Free-standing bath mixer with hand shower, without mounting plate

- Brass
- Free-standing spout:
  Spout outlet height: 811 mm
  Maximum spout projection: 168 mm
- Flowrate: 25L/min at 3bar
- 1.5 m Soft Touch silicone hose
- Brass single-jet hand shower with EASY CLEAN nozzles
- Flowrate: 8L/min at 3bar
- Manual mixing valve



TO ORDER WITH BUILT-IN FIXING PLATE:

P00.6518SA

TECHNICAL DETAILS SEE P.201

P1E.6518SB.A02 P1E.6518SB.B01 P1E.6518SB.D30 P1E.6518SB.H49
P1E.6518SB.H50 P1E.6518SB.H55 P1E.6518SB.H56 P1E.6518SB.H67



ALOSE

THERMOSTATIC BATH



P1E.6510BC

Thermostatic bath shower mixer with hook, hose and hand shower

- Brass
- Thermostatic control with temperature stop 38°C, max. 50°C
- Anti-scald safety THERMO COOL CONTACT
- 150 mm centres
- Maximum spout projection: 181 mm
  Flowrate: 20L/min at 3bar
- 1.5 m Soft Touch silicone hose
- Brass single-jet hand shower
  with EASY CLEAN nozzles
- Flowrate: 8L/min at 3bar

P1E.6510BC.A02 P1E.6510BC.B01 P1E.6510BC.D30 P1E.6510BC.H49
P1E.6510BC.H50 P1E.6510BC.H55 P1E.6510BC.H56 P1E.6510BC.H67



P1E.6510BB

Thermostatic bath shower mixer with sliding bar, hose and hand shower

- Brass
- Thermostatic control with temperature stop 38°C, max. 50°C
- Anti-scald safety THERMO COOL CONTACT
- 150 mm centres
- Maximum spout projection: 181 mm
  Flowrate: 20L/min at 3bar
- 1.5 m Soft Touch silicone hose
- Brass single-jet hand shower
  with EASY CLEAN nozzles
- Flowrate: 8L/min at 3bar
- Slidebar height: 670 mm, 600mm centres

P1E.6510BB.A02 P1E.6510BB.B01 P1E.6510BB.D30 P1E.6510BB.H49
P1E.6510BB.H50 P1E.6510BB.H55 P1E.6510BB.H56 P1E.6510BB.H67

OPTION

3-JET HAND SHOWER EXTRA-COST

- EASY CLEAN nozzles
- Flowrate: 8L/min at 3bar



P00.OP3JA.A02 P00.OP3JA.B01 P00.OP3JA.D30 P00.OP3JA.H49
P00.OP3JA.H50 P00.OP3JA.H55 P00.OP3JA.H56 P00.OP3JA.H67

ALOSE

2-FUNCTION BATH SETS



- Trim only for manual mixing valve
- Automatic diverter
- Bathtub spout
- Set with single-jet hand shower and holder of your choice

PRODUCT INFORMATION

- Brass
- Maximum spout projection: 220 mm Flowrate: 25L/min at 3bar
- 1.5 m Soft Touch silicone hose
- Brass single-jet hand shower with EASY CLEAN nozzles
- Flowrate: 8L/min at 3bar

Model shown ref. P1E.6550RCSG.D30



TO ORDER WITH ROUGH PART:

P00.6550SPA

TECHNICAL DETAILS SEE P.201

Hand shower and hook



P1E.6550RCSG.A02 P1E.6550RCSG.B01 P1E.6550RCSG.D30 P1E.6550RCSG.H49
P1E.6550RCSG.H50 P1E.6550RCSG.H55 P1E.6550RCSG.H56 P1E.6550RCSG.H67

Hand shower on bar
L670 mm, centre distance
600 mm



P1E.6550RBSG.A02 P1E.6550RBSG.B01 P1E.6550RBSG.D30 P1E.6550RBSG.H49
P1E.6550RBSG.H50 P1E.6550RBSG.H55 P1E.6550RBSG.H56 P1E.6550RBSG.H67



- Trim only for wall-mounted 3-hole bath mixer
- Trim only for manual mixing valve
- Set with single-jet hand shower and holder of your choice

PRODUCT INFORMATION

- Brass
- Maximum spout projection: 220 mm Flowrate: 30L/min at 3bar
- 1.5 m Soft Touch silicone hose
- Brass single-jet hand shower with EASY CLEAN nozzles
- Flowrate: 8L/min at 3bar

Model shown ref. P1E.41GM6561.D30



TO ORDER WITH ROUGH PART:

P00.40DMAM

TECHNICAL DETAILS SEE P.201

Hand shower and hook



P1E.41GM6561.A02 P1E.41GM6561.B01 P1E.41GM6561.D30 P1E.41GM6561.H49
P1E.41GM6561.H50 P1E.41GM6561.H55 P1E.41GM6561.H56 P1E.41GM6561.H67

Hand shower on bar
L670 mm, centre distance
600 mm



P1E.41GM6571.A02 P1E.41GM6571.B01 P1E.41GM6571.D30 P1E.41GM6571.H49
P1E.41GM6571.H50 P1E.41GM6571.H55 P1E.41GM6571.H56 P1E.41GM6571.H67

OPTION

3-JET HAND SHOWER EXTRA-COST

- EASY CLEAN nozzles
- Flowrate: 8L/min at 3bar



P00.OP3JA.A02 P00.OP3JA.B01 P00.OP3JA.D30 P00.OP3JA.H49
P00.OP3JA.H50 P00.OP3JA.H55 P00.OP3JA.H56 P00.OP3JA.H67

ALOSE

THERMOSTATIC 2-FUNCTION BATH SETS



- Trim for thermostatic mixer with 2 outlets
- Plate-mounted bathtub spout and single-jet hand shower
- Interchangeable spout and hand shower positioning

PRODUCT INFORMATION

- Brass
- 530x130 mm plate
- Maximum spout projection: 220 mm
  Flowrate: 30L/min at 3bar
- 1.5 m Soft Touch silicone hose
- Brass single-jet hand shower with EASY CLEAN nozzles
  Flowrate: 8L/min at 3bar



TO ORDER WITH ROUGH PART:

P00.THMV2X2

TECHNICAL DETAILS SEE P.202



EXTENSION AVAILABLE:

P00.THAL20

TECHNICAL DETAILS SEE P.207

P1E.BTHV2X2L.A02 P1E.BTHV2X2L.B01 P1E.BTHV2X2L.D30 P1E.BTHV2X2L.H49
P1E.BTHV2X2L.H50 P1E.BTHV2X2L.H55 P1E.BTHV2X2L.H56 P1E.BTHV2X2L.H67



- Trim for thermostatic mixer with 2 outlets and **PUSH** controls
- Bathtub spout or bath waste with integrated filling system
- Plate-mounted single-jet hand shower

PRODUCT INFORMATION

- Brass
- 380x130 mm plate
- Maximum spout projection: 220 mm
  Flowrate: 30L/min at 3bar
- 1.5 m Soft Touch silicone hose
- Brass single-jet hand shower with EASY CLEAN nozzles
  Flowrate: 8L/min at 3bar

Model shown ref. P1E.P2RDSG.D30



TO ORDER WITH ROUGH PART:

P00.THMP2RX1

TECHNICAL DETAILS SEE P.202



EXTENSION AVAILABLE:

P00.THAL20

TECHNICAL DETAILS SEE P.207

Wall spout



P1E.P2RDSG.A02 P1E.P2RDSG.B01 P1E.P2RDSG.D30 P1E.P2RDSG.H49
P1E.P2RDSG.H50 P1E.P2RDSG.H55 P1E.P2RDSG.H56 P1E.P2RDSG.H67

Filling system via discharge wheel



P1E.P2RDF.A02 P1E.P2RDF.B01 P1E.P2RDF.D30 P1E.P2RDF.H49
P1E.P2RDF.H50 P1E.P2RDF.H55 P1E.P2RDF.H56 P1E.P2RDF.H67

Outlet for filling system via discharge wheel

NOT PROVIDED

P1E.BTHP2RX1.A02 P1E.BTHP2RX1.B01 P1E.BTHP2RX1.D30 P1E.BTHP2RX1.H49
P1E.BTHP2RX1.H50 P1E.BTHP2RX1.H55 P1E.BTHP2RX1.H56 P1E.BTHP2RX1.H67

OPTION

3-JET HAND SHOWER EXTRA-COST

- EASY CLEAN nozzles
- Flowrate: 8L/min at 3bar



P00.OP3JA.A02 P00.OP3JA.B01 P00.OP3JA.D30 P00.OP3JA.H49
P00.OP3JA.H50 P00.OP3JA.H55 P00.OP3JA.H56 P00.OP3JA.H67

ALOSE

THERMOSTATIC 3-FUNCTION BATH SETS



- Trim for thermostatic mixer with 3 outlets
- Showerhead Ø300 mm with shower arm of your choice
- Bathtub spout
- Set with single-jet hand shower and holder of your choice

PRODUCT INFORMATION

- Brass
- 445x130 mm plate
- Maximum spout projection: 220 mm
  Flowrate: 30L/min at 3bar
- Brass showerhead with EASY CLEAN nozzles
  Flowrate: 9.5L/min at 3bar
- 1.5 m Soft Touch silicone hose
- Brass single-jet hand shower with EASY CLEAN nozzles
  Flowrate: 8L/min at 3bar

Model shown ref. P1E.V3MH5CSG.D30





TO ORDER WITH ROUGH PART:

P00.THMV3R
Left-hand mixer tap
TECHNICAL DETAILS SEE P.203



EXTENSION AVAILABLE:

P00.THAL20
TECHNICAL DETAILS SEE P.207

 Wall arm L450 mm and showerhead Ø300 mm	Hand shower and hook		P1E.V3MH5CSG.A02	P1E.V3MH5CSG.B01	P1E.V3MH5CSG.D30	P1E.V3MH5CSG.H49
			P1E.V3MH5CSG.H50	P1E.V3MH5CSG.H55	P1E.V3MH5CSG.H56	P1E.V3MH5CSG.H67
	Hand shower on rail L670 mm, centre distance 600 mm		P1E.V3MH5BSG.A02	P1E.V3MH5BSG.B01	P1E.V3MH5BSG.D30	P1E.V3MH5BSG.H49
			P1E.V3MH5BSG.H50	P1E.V3MH5BSG.H55	P1E.V3MH5BSG.H56	P1E.V3MH5BSG.H67
 Vertical arm L120 mm and showerhead Ø300 mm	Hand shower and hook		P1E.V3MH6C9G.A02	P1E.V3MH6C9G.B01	P1E.V3MH6C9G.D30	P1E.V3MH6C9G.H49
			P1E.V3MH6C9G.H50	P1E.V3MH6C9G.H55	P1E.V3MH6C9G.H56	P1E.V3MH6C9G.H67
	Hand shower on rail L670 mm, centre distance 600 mm		P1E.V3MH6B9G.A02	P1E.V3MH6B9G.B01	P1E.V3MH6B9G.D30	P1E.V3MH6B9G.H49
			P1E.V3MH6B9G.H50	P1E.V3MH6B9G.H55	P1E.V3MH6B9G.H56	P1E.V3MH6B9G.H67

OPTION

3-JET HAND SHOWER EXTRA-COST

- EASY CLEAN nozzles
- Flowrate: 8L/min at 3bar



P00.OP3JA.A02	P00.OP3JA.B01	P00.OP3JA.D30	P00.OP3JA.H49
P00.OP3JA.H50	P00.OP3JA.H55	P00.OP3JA.H56	P00.OP3JA.H67

ALOSE

THERMOSTATIC 3-FUNCTION BATH SETS



- Trim for thermostatic mixer with 3 outlets and **PUSH** controls
- Showerhead Ø300 mm with shower arm of your choice
- Bathtub spout or bath waste with integrated filling system
- Plate-mounted single-jet hand shower

PRODUCT INFORMATION

- Brass
- 470x130 mm plate
- Maximum spout projection: 220 mm
  Flowrate: 30L/min at 3bar
- Brass showerhead with EASY CLEAN nozzles
  Flowrate: 9.5L/min at 3bar
- 1.5 m Soft Touch silicone hose
- Brass single-jet hand shower with EASY CLEAN nozzles
  Flowrate: 8L/min at 3bar

Model shown ref. P1E.P3MRX5SG.D30





TO ORDER WITH ROUGH PART:

P00.THMP3RX1

TECHNICAL DETAILS SEE P.204



EXTENSION AVAILABLE:

P00.THAL20

TECHNICAL DETAILS SEE P.207



Wall arm L450 mm and showerhead Ø300 mm

Wall spout		P1E.P3MRX5SG.A02 · P1E.P3MRX5SG.B01 · P1E.P3MRX5SG.D30 · P1E.P3MRX5SG.H49 · P1E.P3MRX5SG.H50 · P1E.P3MRX5SG.H55 · P1E.P3MRX5SG.H56 · P1E.P3MRX5SG.H67	
Filling system via discharge wheel		P1E.P3MRX5F.A02 · P1E.P3MRX5F.B01 · P1E.P3MRX5F.D30 · P1E.P3MRX5F.H49 · P1E.P3MRX5F.H50 · P1E.P3MRX5F.H55 · P1E.P3MRX5F.H56 · P1E.P3MRX5F.H67	
Outlet for filling system via discharge wheel	**NOT PROVIDED**	P1E.P3MRX5X.A02 · P1E.P3MRX5X.B01 · P1E.P3MRX5X.D30 · P1E.P3MRX5X.H49 · P1E.P3MRX5X.H50 · P1E.P3MRX5X.H55 · P1E.P3MRX5X.H56 · P1E.P3MRX5X.H67	



Vertical arm L120 mm and showerhead Ø300 mm

Wall spout		P1E.P3MRX6SG.A02 · P1E.P3MRX6SG.B01 · P1E.P3MRX6SG.D30 · P1E.P3MRX6SG.H49 · P1E.P3MRX6SG.H50 · P1E.P3MRX6SG.H55 · P1E.P3MRX6SG.H56 · P1E.P3MRX6SG.H67	
Filling system via discharge wheel		P1E.P3MRX6F.A02 · P1E.P3MRX6F.B01 · P1E.P3MRX6F.D30 · P1E.P3MRX6F.H49 · P1E.P3MRX6F.H50 · P1E.P3MRX6F.H55 · P1E.P3MRX6F.H56 · P1E.P3MRX6F.H67	
Outlet for filling system via discharge wheel	**NOT PROVIDED**	P1E.P3MRX6X.A02 · P1E.P3MRX6X.B01 · P1E.P3MRX6X.D30 · P1E.P3MRX6X.H49 · P1E.P3MRX6X.H50 · P1E.P3MRX6X.H55 · P1E.P3MRX6X.H56 · P1E.P3MRX6X.H67	

OPTION

3-JET HAND SHOWER EXTRA-COST

- EASY CLEAN nozzles
- Flowrate: 8L/min at 3bar



P00.OP3JA.A02 · P00.OP3JA.B01 · P00.OP3JA.D30 · P00.OP3JA.H49 · P00.OP3JA.H50 · P00.OP3JA.H55 · P00.OP3JA.H56 · P00.OP3JA.H67

ALOSE

BATH WASTE



P1E.302

Geberit bath waste, adjustable height: mini 165 mm / maxi 390 mm; adjustable projection: mini 110 mm / maxi 230 mm, outlet Ø 40 mm, - European model 150.616.21.1

- **Brass drain handle and valve**
- **For bathtub with a Ø52 mm waste opening**

P1E.302.A02 P1E.302.D30 P1E.302.H49
P1E.302.H50 P1E.302.H55 P1E.302.H56 P1E.302.H67



P1E.302GM

Geberit bath waste, big size, adjustable height: mini 165 mm / maxi 580 mm; adjustable projection: mini 110 mm / maxi 700 mm - outlet, Ø 40 mm, delivered with stylised control knob - European model 150.616.21.1

- **Brass drain handle and valve**
- **For bathtub with a Ø52 mm waste opening**

P1E.302GM.A02 P1E.302GM.D30 P1E.302GM.H49
P1E.302GM.H50 P1E.302GM.H55 P1E.302GM.H56 P1E.302GM.H67



P00.305/H

Complete manual bath click waste, for baths with integrated overflow or overflow rim

- **Brass valve and waste, plated**
- **For bathtub with a Ø52 mm waste opening, Ø70 mm cap**
- **Brass drain and plug**

P00.305/H.A02 P00.305/H.D30 P00.305/H.H49
P00.305/H.H50 P00.305/H.H55 P00.305/H.H56 P00.305/H.H67

ALOSE

THERMOSTATIC SHOWER



P1E.6528BB

Wall mounted thermostatic shower mixer ½" with sliding bar, hose and hand shower

- Brass
- Thermostatic control with temperature stop 38°C, max. 50°C
- Anti-scald safety THERMO COOL CONTACT
- 150 mm centres
- 1.5 m Soft Touch silicone hose
- Brass single-jet hand shower with EASY CLEAN nozzles Flowrate: 8L/min at 3bar
- Slidebar height: 670 mm, 600 mm centres

P1E.6528BB.A02 P1E.6528BB.B01 P1E.6528BB.D30 P1E.6528BB.H49
P1E.6528BB.H50 P1E.6528BB.H55 P1E.6528BB.H56 P1E.6528BB.H67



P1E.6529CD

Wall mounted thermostatic shower mixer ½" with shower column, shower head Ø 200 mm, hose and hand shower

- Brass
- Thermostatic control with temperature stop 38°C, max. 50°C
- Anti-scald safety THERMO COOL CONTACT
- 150 mm centres
- Brass showerhead Ø200 mm with EASY CLEAN nozzles Flowrate: 9.5L/min at 3bar
- 1.5 m Soft Touch silicone hose
- Brass single-jet hand shower with EASY CLEAN nozzles Flowrate: 8L/min at 3bar
- Height: 1163 mm - Maximum showerhead projection: 463 mm - Fixing distance: 937 mm

P1E.6529CD.A02 P1E.6529CD.B01 P1E.6529CD.D30 P1E.6529CD.H49
P1E.6529CD.H50 P1E.6529CD.H55 P1E.6529CD.H56 P1E.6529CD.H67



P1E.6529CG

Wall mounted thermostatic shower mixer ½" with shower column, shower head Ø 300 mm, hand shower and hose

- Brass
- Thermostatic control with temperature stop 38°C, max. 50°C
- Anti-scald safety THERMO COOL CONTACT
- 150 mm centres
- Brass showerhead Ø300 mm with EASY CLEAN nozzles Flowrate: 9.5L/min at 3bar
- 1.5 m Soft Touch silicone hose
- Brass single-jet hand shower with EASY CLEAN nozzles Flowrate: 8L/min at 3bar
- Height: 1163 mm - Maximum showerhead projection: 463 mm - Fixing distance: 937 mm

P1E.6529CG.A02 P1E.6529CG.B01 P1E.6529CG.D30 P1E.6529CG.H49
P1E.6529CG.H50 P1E.6529CG.H55 P1E.6529CG.H56 P1E.6529CG.H67

OPTION

3-JET HAND SHOWER EXTRA-COST

- EASY CLEAN nozzles
- Flowrate: 8L/min at 3bar



P00.0P3JA.A02 P00.0P3JA.B01 P00.0P3JA.D30 P00.0P3JA.H49
P00.0P3JA.H50 P00.0P3JA.H55 P00.0P3JA.H56 P00.0P3JA.H67

ALOSE

SINGLE-FUNCTION SHOWER SET



- Trim only for manual mixing valve
- Slidebar and single-jet hand shower

PRODUCT INFORMATION

- Brass
- 1.5 m Soft Touch silicone hose
- Brass single-jet hand shower with EASY CLEAN nozzles Flowrate: 8L/min at 3bar
- Slidebar height: 670 mm, 600 mm centres



TO ORDER WITH ROUGH PART:

P00.6541SPA

TECHNICAL DETAILS SEE P.200

P1E.6571SPB.A02 P1E.6571SPB.B01 P1E.6571SPB.D30 P1E.6571SPB.H49
P1E.6571SPB.H50 P1E.6571SPB.H55 P1E.6571SPB.H56 P1E.6571SPB.H67

2-FUNCTION SHOWER SET



- Trim only for manual mixing valve
- Automatic diverter
- Showerhead Ø200 mm with wall-mounted shower arm
- Set with single-jet hand shower and holder of your choice

PRODUCT INFORMATION

- Brass
- Brass showerhead with EASY CLEAN nozzles Flowrate: 9.5L/min at 3bar
- 1.5 m Soft Touch silicone hose
- Brass single-jet hand shower with EASY CLEAN nozzles Flowrate: 8L/min at 3bar

Model shown ref. P1E.6550R1C.D30





TO ORDER WITH ROUGH PART:

P00.6550SPA

TECHNICAL DETAILS SEE P.201



Wall arm L450 mm and showerhead Ø200 mm



Hand shower and hook

P1E.6550R1C.A02 P1E.6550R1C.B01 P1E.6550R1C.D30 P1E.6550R1C.H49
P1E.6550R1C.H50 P1E.6550R1C.H55 P1E.6550R1C.H56 P1E.6550R1C.H67



Hand shower on rail L670 mm, centre distance 600 mm

P1E.6550R1B.A02 P1E.6550R1B.B01 P1E.6550R1B.D30 P1E.6550R1B.H49
P1E.6550R1B.H50 P1E.6550R1B.H55 P1E.6550R1B.H56 P1E.6550R1B.H67

OPTION

3-JET HAND SHOWER EXTRA-COST

- EASY CLEAN nozzles
- Flowrate: 8L/min at 3bar



P00.0P3JA.A02 P00.0P3JA.B01 P00.0P3JA.D30 P00.0P3JA.H49
P00.0P3JA.H50 P00.0P3JA.H55 P00.0P3JA.H56 P00.0P3JA.H67

ALOSE

2-FUNCTION THERMOSTATIC SHOWER SETS



- Trim for thermostatic mixer with 2 outlets
- Showerhead Ø200 mm with shower arm of your choice
- Set with single-jet hand shower and holder of your choice

PRODUCT INFORMATION

- Brass
- 130x205 mm plate
- Brass showerhead with EASY CLEAN nozzles Flowrate: 9.5L/min at 3bar
- 1.5 m Soft Touch silicone hose
- Brass single-jet hand shower with EASY CLEAN nozzles Flowrate: 8L/min at 3bar

Model shown ref. P1E.D2M1C.D30





TO ORDER WITH ROUGH PART:

P00.THMD2

TECHNICAL DETAILS SEE P.204



EXTENSION AVAILABLE:

P00.THAL20

TECHNICAL DETAILS SEE P.207

Wall arm L450 mm and showerhead Ø200 mm	Hand shower and hook		P1E.D2M1C.A02 P1E.D2M1C.H50	P1E.D2M1C.B01 P1E.D2M1C.H55	P1E.D2M1C.D30 P1E.D2M1C.H56	P1E.D2M1C.H49 P1E.D2M1C.H67
	Hand shower and shelf 300x100 mm		P1E.D2M1T.A02 P1E.D2M1T.H50	P1E.D2M1T.B01 P1E.D2M1T.H55	P1E.D2M1T.D30 P1E.D2M1T.H56	P1E.D2M1T.H49 P1E.D2M1T.H67
	Hand shower on rail L670 mm, centre distance 600 mm		P1E.D2M1B.A02 P1E.D2M1B.H50	P1E.D2M1B.B01 P1E.D2M1B.H55	P1E.D2M1B.D30 P1E.D2M1B.H56	P1E.D2M1B.H49 P1E.D2M1B.H67
Vertical arm L120 mm and showerhead Ø200 mm	Hand shower and hook		P1E.D2M2C.A02 P1E.D2M2C.H50	P1E.D2M2C.B01 P1E.D2M2C.H55	P1E.D2M2C.D30 P1E.D2M2C.H56	P1E.D2M2C.H49 P1E.D2M2C.H67
	Hand shower and shelf 300x100 mm		P1E.D2M2T.A02 P1E.D2M2T.H50	P1E.D2M2T.B01 P1E.D2M2T.H55	P1E.D2M2T.D30 P1E.D2M2T.H56	P1E.D2M2T.H49 P1E.D2M2T.H67
	Hand shower on rail L670 mm, centre distance 600 mm		P1E.D2M2B.A02 P1E.D2M2B.H50	P1E.D2M2B.B01 P1E.D2M2B.H55	P1E.D2M2B.D30 P1E.D2M2B.H56	P1E.D2M2B.H49 P1E.D2M2B.H67

OPTION

3-JET HAND SHOWER EXTRA-COST

- EASY CLEAN nozzles
- Flowrate: 8L/min at 3bar



P00.OP3JA.A02 P00.OP3JA.H50	P00.OP3JA.B01 P00.OP3JA.H55	P00.OP3JA.D30 P00.OP3JA.H56	P00.OP3JA.H49 P00.OP3JA.H67

ALOSE

2-FUNCTION THERMOSTATIC SHOWER SETS



- Trim for thermostatic mixer with 2 outlets
- Showerhead Ø300 mm with shower arm of your choice
- Set with single-jet hand shower and holder of your choice

PRODUCT INFORMATION

- Brass
- 130x335 mm plate
- Brass showerhead with EASY CLEAN nozzles Flowrate: 9.5L/min at 3bar
- 1.5 m Soft Touch silicone hose
- Brass single-jet hand shower with EASY CLEAN nozzles Flowrate: 8L/min at 3bar

Model shown ref. P1E.V2MH5C.D30





TO ORDER WITH ROUGH PART:

P00.THMV2H

TECHNICAL DETAILS SEE P.205



EXTENSION AVAILABLE:

P00.THAL20

TECHNICAL DETAILS SEE P.207

Wall arm L450 mm and showerhead Ø300 mm	Hand shower and hook		P1E.V2MH5C.A02	P1E.V2MH5C.B01	P1E.V2MH5C.D30	P1E.V2MH5C.H49
			P1E.V2MH5C.H50	P1E.V2MH5C.H55	P1E.V2MH5C.H56	P1E.V2MH5C.H67
	Hand shower and shelf 300x100 mm		P1E.V2MH5T.A02	P1E.V2MH5T.B01	P1E.V2MH5T.D30	P1E.V2MH5T.H49
			P1E.V2MH5T.H50	P1E.V2MH5T.H55	P1E.V2MH5T.H56	P1E.V2MH5T.H67
	Hand shower on rail L670 mm, centre distance 600 mm		P1E.V2MH5B.A02	P1E.V2MH5B.B01	P1E.V2MH5B.D30	P1E.V2MH5B.H49
			P1E.V2MH5B.H50	P1E.V2MH5B.H55	P1E.V2MH5B.H56	P1E.V2MH5B.H67
Vertical arm L120 mm and showerhead Ø300 mm	Hand shower and hook		P1E.V2MH6C.A02	P1E.V2MH6C.B01	P1E.V2MH6C.D30	P1E.V2MH6C.H49
			P1E.V2MH6C.H50	P1E.V2MH6C.H55	P1E.V2MH6C.H56	P1E.V2MH6C.H67
	Hand shower and shelf 300x100 mm		P1E.V2MH6T.A02	P1E.V2MH6T.B01	P1E.V2MH6T.D30	P1E.V2MH6T.H49
			P1E.V2MH6T.H50	P1E.V2MH6T.H55	P1E.V2MH6T.H56	P1E.V2MH6T.H67
	Hand shower on rail L670 mm, centre distance 600 mm		P1E.V2MH6B.A02	P1E.V2MH6B.B01	P1E.V2MH6B.D30	P1E.V2MH6B.H49
			P1E.V2MH6B.H50	P1E.V2MH6B.H55	P1E.V2MH6B.H56	P1E.V2MH6B.H67

OPTION

3-JET HAND SHOWER EXTRA-COST

- EASY CLEAN nozzles
- Flowrate: 8L/min at 3bar



P00.OP3JA.A02	P00.OP3JA.B01	P00.OP3JA.D30	P00.OP3JA.H49
P00.OP3JA.H50	P00.OP3JA.H55	P00.OP3JA.H56	P00.OP3JA.H67

ALOSE

2-FUNCTION THERMOSTATIC SHOWER SETS



- Trim for thermostatic mixer with 2 outlets
- Stainless steel sky shower Ø380 mm
- Set with single-jet hand shower and holder of your choice

PRODUCT INFORMATION

- Brass
- 130x335 mm plate
- Sky shower with EASY CLEAN nozzles Flowrate: 14.5L/min at 3bar
- 1.5 m Soft Touch silicone hose
- Brass single-jet hand shower with EASY CLEAN nozzles Flowrate: 8L/min at 3bar

Model shown ref. P1E.V2MH9C.D30

PLEASE NOTE: FOR PACKS ORDERED IN FINISHES A02 AND B01, THE SKYSHOWER WILL BE DELIVERED IN A POLISHED STAINLESS STEEL FINISH.





TO ORDER WITH ROUGH PART:

P00.THMV2H

TECHNICAL DETAILS SEE P.205



EXTENSION AVAILABLE:

P00.THAL20

TECHNICAL DETAILS SEE P.207



Skyshower Ø380 mm

Hand shower and hook		P1E.V2MH9C.A02	P1E.V2MH9C.B01	P1E.V2MH9C.D30	P1E.V2MH9C.H49
		P1E.V2MH9C.H50	P1E.V2MH9C.H55	P1E.V2MH9C.H56	P1E.V2MH9C.H67
Hand shower and shelf 300x100 mm		P1E.V2MH9T.A02	P1E.V2MH9T.B01	P1E.V2MH9T.D30	P1E.V2MH9T.H49
		P1E.V2MH9T.H50	P1E.V2MH9T.H55	P1E.V2MH9T.H56	P1E.V2MH9T.H67
Hand shower on rail L670 mm, centre distance 600 mm		P1E.V2MH9B.A02	P1E.V2MH9B.B01	P1E.V2MH9B.D30	P1E.V2MH9B.H49
		P1E.V2MH9B.H50	P1E.V2MH9B.H55	P1E.V2MH9B.H56	P1E.V2MH9B.H67

OPTION

3-JET HAND SHOWER EXTRA-COST

- EASY CLEAN nozzles
- Flowrate: 8L/min at 3bar



P00.OP3JA.A02	P00.OP3JA.B01	P00.OP3JA.D30	P00.OP3JA.H49
P00.OP3JA.H50	P00.OP3JA.H55	P00.OP3JA.H56	P00.OP3JA.H67

ALOSE

2-FUNCTION THERMOSTATIC SHOWER SETS



- Trim for thermostatic mixer with 2 outlets
- Stainless steel sky shower Ø380 mm or showerhead Ø300 mm with shower arm of your choice
- Plate-mounted single-jet hand shower

PRODUCT INFORMATION

- Brass
- 440x130 mm plate
- Sky shower with EASY CLEAN nozzles Flowrate: 14.5L/min at 3bar
- Brass showerhead with EASY CLEAN nozzles Flowrate: 9.5L/min at 3bar
- 1.5 m Soft Touch silicone hose
- Brass single-jet hand shower with EASY CLEAN nozzles Flowrate: 8L/min at 3bar

Model shown ref. P1E.V2MRX5.D30

PLEASE NOTE: FOR PACKS ORDERED IN FINISHES A02 AND B01, THE SKYSHOWER WILL BE DELIVERED IN A POLISHED STAINLESS STEEL FINISH.





TO ORDER WITH ROUGH PART:

P00.THMV2RX1

TECHNICAL DETAILS SEE P.205



EXTENSION AVAILABLE:

P00.THAL20

TECHNICAL DETAILS SEE P.207

Wall arm L450 mm and showerhead Ø300 mm		P1E.V2MRX5.A02 P1E.V2MRX5.H50	P1E.V2MRX5.B01 P1E.V2MRX5.H55	P1E.V2MRX5.D30 P1E.V2MRX5.H56	P1E.V2MRX5.H49 P1E.V2MRX5.H67
Vertical arm L120 mm and showerhead Ø300 mm		P1E.V2MRX6.A02 P1E.V2MRX6.H50	P1E.V2MRX6.B01 P1E.V2MRX6.H55	P1E.V2MRX6.D30 P1E.V2MRX6.H56	P1E.V2MRX6.H49 P1E.V2MRX6.H67
Skyshower Ø380 mm		P1E.V2MRX9.A02 P1E.V2MRX9.H50	P1E.V2MRX9.B01 P1E.V2MRX9.H55	P1E.V2MRX9.D30 P1E.V2MRX9.H56	P1E.V2MRX9.H49 P1E.V2MRX9.H67

OPTION

3-JET HAND SHOWER EXTRA-COST

- EASY CLEAN nozzles
- Flowrate: 8L/min at 3bar



P00.OP3JA.A02 P00.OP3JA.H50	P00.OP3JA.B01 P00.OP3JA.H55	P00.OP3JA.D30 P00.OP3JA.H56	P00.OP3JA.H49 P00.OP3JA.H67

ALOSE

2-FUNCTION THERMOSTATIC SHOWER SETS



- Trim for thermostatic mixer with 2 outlets
- Trim only for valves
- Showerhead Ø200 mm with shower arm of your choice
- Set with single-jet hand shower and holder of your choice

PRODUCT INFORMATION

- Brass
- Brass showerhead with EASY CLEAN nozzles Flowrate: 9.5L/min at 3bar
- 1.5 m Soft Touch silicone hose
- Brass single-jet hand shower with EASY CLEAN nozzles Flowrate: 8L/min at 3bar

Model shown ref. P1E.BV2M1C.D30





TO ORDER WITH ROUGH PART:

P00.THM2VA

TECHNICAL DETAILS SEE P.206



EXTENSION AVAILABLE:

P00.THAL20

TECHNICAL DETAILS SEE P.207

Wall arm L450 mm and showerhead Ø200 mm	Hand shower and hook		P1E.BV2M1C.A02 P1E.BV2M1C.H50	P1E.BV2M1C.B01 P1E.BV2M1C.H55	P1E.BV2M1C.D30 P1E.BV2M1C.H56	P1E.BV2M1C.H49 P1E.BV2M1C.H67
	Hand shower and shelf 300x100 mm		P1E.BV2M1T.A02 P1E.BV2M1T.H50	P1E.BV2M1T.B01 P1E.BV2M1T.H55	P1E.BV2M1T.D30 P1E.BV2M1T.H56	P1E.BV2M1T.H49 P1E.BV2M1T.H67
	Hand shower on rail L670 mm, centre distance 600 mm		P1E.BV2M1B.A02 P1E.BV2M1B.H50	P1E.BV2M1B.B01 P1E.BV2M1B.H55	P1E.BV2M1B.D30 P1E.BV2M1B.H56	P1E.BV2M1B.H49 P1E.BV2M1B.H67
Vertical arm L120 mm and showerhead Ø200 mm	Hand shower and hook		P1E.BV2M2C.A02 P1E.BV2M2C.H50	P1E.BV2M2C.B01 P1E.BV2M2C.H55	P1E.BV2M2C.D30 P1E.BV2M2C.H56	P1E.BV2M2C.H49 P1E.BV2M2C.H67
	Hand shower and shelf 300x100 mm		P1E.BV2M2T.A02 P1E.BV2M2T.H50	P1E.BV2M2T.B01 P1E.BV2M2T.H55	P1E.BV2M2T.D30 P1E.BV2M2T.H56	P1E.BV2M2T.H49 P1E.BV2M2T.H67
	Hand shower on rail L670 mm, centre distance 600 mm		P1E.BV2M2B.A02 P1E.BV2M2B.H50	P1E.BV2M2B.B01 P1E.BV2M2B.H55	P1E.BV2M2B.D30 P1E.BV2M2B.H56	P1E.BV2M2B.H49 P1E.BV2M2B.H67

OPTION

3-JET HAND SHOWER EXTRA-COST

- EASY CLEAN nozzles
- Flowrate: 8L/min at 3bar



P00.OP3JA.A02 P00.OP3JA.H50	P00.OP3JA.B01 P00.OP3JA.H55	P00.OP3JA.D30 P00.OP3JA.H56	P00.OP3JA.H49 P00.OP3JA.H67

ALOSE

2-FUNCTION THERMOSTATIC SHOWER SETS



- Trim for thermostatic mixer with 2 outlets
- Trim only for valves
- Stainless steel sky shower Ø380 mm
- Set with single-jet hand shower and holder of your choice

PRODUCT INFORMATION

- Brass
- Sky shower with EASY CLEAN nozzles Flowrate: 14.5L/min at 3bar
- 1.5 m Soft Touch silicone hose
- Brass single-jet hand shower with EASY CLEAN nozzles Flowrate: 8L/min at 3bar

Model shown ref. P1E.BV2M9C.D30

PLEASE NOTE: FOR PACKS ORDERED IN FINISHES A02 AND B01, THE SKYSHOWER WILL BE DELIVERED IN A POLISHED STAINLESS STEEL FINISH.





TO ORDER WITH ROUGH PART:

P00.THM2VA

TECHNICAL DETAILS SEE P.206



EXTENSION AVAILABLE:

P00.THAL20

TECHNICAL DETAILS SEE P.207



Skyshower Ø380 mm

Hand shower and hook		P1E.BV2M9C.A02	P1E.BV2M9C.B01	P1E.BV2M9C.D30	P1E.BV2M9C.H49
		P1E.BV2M9C.H50	P1E.BV2M9C.H55	P1E.BV2M9C.H56	P1E.BV2M9C.H67
Hand shower and shelf 300x100 mm		P1E.BV2M9T.A02	P1E.BV2M9T.B01	P1E.BV2M9T.D30	P1E.BV2M9T.H49
		P1E.BV2M9T.H50	P1E.BV2M9T.H55	P1E.BV2M9T.H56	P1E.BV2M9T.H67
Hand shower on rail L670 mm, centre distance 600 mm		P1E.BV2M9B.A02	P1E.BV2M9B.B01	P1E.BV2M9B.D30	P1E.BV2M9B.H49
		P1E.BV2M9B.H50	P1E.BV2M9B.H55	P1E.BV2M9B.H56	P1E.BV2M9B.H67

OPTION

3-JET HAND SHOWER EXTRA-COST

- EASY CLEAN nozzles
- Flowrate: 8L/min at 3bar



P00.OP3JA.A02	P00.OP3JA.B01	P00.OP3JA.D30	P00.OP3JA.H49
P00.OP3JA.H50	P00.OP3JA.H55	P00.OP3JA.H56	P00.OP3JA.H67

ALOSE

2-FUNCTION THERMOSTATIC SHOWER SETS



- Trim for thermostatic mixer with 2 outlets and **PUSH** controls
- Showerhead Ø200 mm with shower arm of your choice
- Set with single-jet hand shower and holder of your choice

PRODUCT INFORMATION

- Brass
- 130x295 mm plate
- Brass showerhead with EASY CLEAN nozzles Flowrate: 9.5L/min at 3bar
- 1.5 m Soft Touch silicone hose
- Brass single-jet hand shower with EASY CLEAN nozzles Flowrate: 8L/min at 3bar

Model shown ref. P1E.P2MH1C.D30





TO ORDER WITH ROUGH PART:

P00.THMP2H

TECHNICAL DETAILS SEE P.206



EXTENSION AVAILABLE:

P00.THAL20

TECHNICAL DETAILS SEE P.207

Wall arm L450 mm and showerhead Ø200 mm	Hand shower and hook		P1E.P2MH1C.A02 P1E.P2MH1C.H50	P1E.P2MH1C.B01 P1E.P2MH1C.H55	P1E.P2MH1C.D30 P1E.P2MH1C.H56	P1E.P2MH1C.H49 P1E.P2MH1C.H67
	Hand shower and shelf 300x100 mm		P1E.P2MH1T.A02 P1E.P2MH1T.H50	P1E.P2MH1T.B01 P1E.P2MH1T.H55	P1E.P2MH1T.D30 P1E.P2MH1T.H56	P1E.P2MH1T.H49 P1E.P2MH1T.H67
	Hand shower on rail L670 mm, centre distance 600 mm		P1E.P2MH1B.A02 P1E.P2MH1B.H50	P1E.P2MH1B.B01 P1E.P2MH1B.H55	P1E.P2MH1B.D30 P1E.P2MH1B.H56	P1E.P2MH1B.H49 P1E.P2MH1B.H67
Vertical arm L120 mm and showerhead Ø200 mm	Hand shower and hook		P1E.P2MH2C.A02 P1E.P2MH2C.H50	P1E.P2MH2C.B01 P1E.P2MH2C.H55	P1E.P2MH2C.D30 P1E.P2MH2C.H56	P1E.P2MH2C.H49 P1E.P2MH2C.H67
	Hand shower and shelf 300x100 mm		P1E.P2MH2T.A02 P1E.P2MH2T.H50	P1E.P2MH2T.B01 P1E.P2MH2T.H55	P1E.P2MH2T.D30 P1E.P2MH2T.H56	P1E.P2MH2T.H49 P1E.P2MH2T.H67
	Hand shower on rail L670 mm, centre distance 600 mm		P1E.P2MH2B.A02 P1E.P2MH2B.H50	P1E.P2MH2B.B01 P1E.P2MH2B.H55	P1E.P2MH2B.D30 P1E.P2MH2B.H56	P1E.P2MH2B.H49 P1E.P2MH2B.H67

OPTION

3-JET HAND SHOWER EXTRA-COST

- EASY CLEAN nozzles
- Flowrate: 8L/min at 3bar



P00.OP3JA.A02 P00.OP3JA.H50	P00.OP3JA.B01 P00.OP3JA.H55	P00.OP3JA.D30 P00.OP3JA.H56	P00.OP3JA.H49 P00.OP3JA.H67

ALOSE

2-FUNCTION THERMOSTATIC SHOWER SETS



- Trim for thermostatic mixer with 2 outlets and **PUSH** controls
- Stainless steel sky shower Ø380 mm
- Set with single-jet hand shower and holder of your choice

PRODUCT INFORMATION

- Brass
- 130x295 mm plate
- Sky shower with EASY CLEAN nozzles Flowrate: 14.5L/min at 3bar
- 1.5 m Soft Touch silicone hose
- Brass single-jet hand shower with EASY CLEAN nozzles Flowrate: 8L/min at 3bar

Model shown ref. P1E.P2MH9C.D30

PLEASE NOTE: FOR PACKS ORDERED IN FINISHES A02 AND B01, THE SKYSHOWER WILL BE DELIVERED IN A POLISHED STAINLESS STEEL FINISH.





TO ORDER WITH ROUGH PART:

P00.THMP2H

TECHNICAL DETAILS SEE P.206



EXTENSION AVAILABLE:

P00.THAL20

TECHNICAL DETAILS SEE P.207

Skyshower Ø380 mm

Hand shower and hook		P1E.P2MH9C.A02	P1E.P2MH9C.B01	P1E.P2MH9C.D30	P1E.P2MH9C.H49
		P1E.P2MH9C.H50	P1E.P2MH9C.H55	P1E.P2MH9C.H56	P1E.P2MH9C.H67
Hand shower and shelf 300x100 mm		P1E.P2MH9T.A02	P1E.P2MH9T.B01	P1E.P2MH9T.D30	P1E.P2MH9T.H49
		P1E.P2MH9T.H50	P1E.P2MH9T.H55	P1E.P2MH9T.H56	P1E.P2MH9T.H67
Hand shower on rail L670 mm, centre distance 600 mm		P1E.P2MH9B.A02	P1E.P2MH9B.B01	P1E.P2MH9B.D30	P1E.P2MH9B.H49
		P1E.P2MH9B.H50	P1E.P2MH9B.H55	P1E.P2MH9B.H56	P1E.P2MH9B.H67

OPTION

3-JET HAND SHOWER EXTRA-COST

- EASY CLEAN nozzles
- Flowrate: 8L/min at 3bar



P00.OP3JA.A02	P00.OP3JA.B01	P00.OP3JA.D30	P00.OP3JA.H49
P00.OP3JA.H50	P00.OP3JA.H55	P00.OP3JA.H56	P00.OP3JA.H67

ALOSE

3-FUNCTION THERMOSTATIC SHOWER SETS

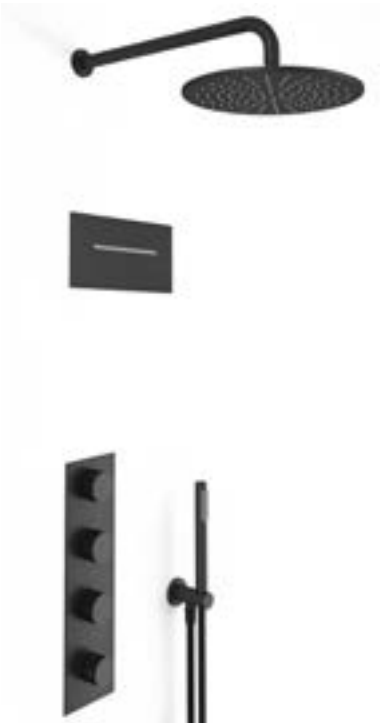

- Trim for thermostatic mixer with 3 outlets
- Stainless steel wall-mounted shower water blade
- Showerhead Ø300 mm with shower arm of your choice
- Set with single-jet hand shower and holder of your choice

PRODUCT INFORMATION

- Brass
- 130x445 mm plate
- Brass showerhead with EASY CLEAN nozzles Flowrate: 9.5L/min at 3bar
- Wall-mounted shower water blade flowrate: 17L/min at 3bar
- 1.5 m Soft Touch silicone hose
- Brass single-jet hand shower with EASY CLEAN nozzles Flowrate: 8L/min at 3bar

Model shown ref. P1E.V3MH5CL.D30

PLEASE NOTE: FOR PACKS ORDERED IN FINISHES A02 AND B01, THE WATER BLADE WILL BE DELIVERED IN A POLISHED STAINLESS STEEL FINISH.



TO ORDER WITH ROUGH PART:

P00.THMV3H

TECHNICAL DETAILS SEE P.203



EXTENSION AVAILABLE:

P00.THAL20

TECHNICAL DETAILS SEE P.207

Wall arm L450 mm and showerhead Ø300 mm	Hand shower and hook		P1E.V3MH5CL.A02 P1E.V3MH5CL.H50	P1E.V3MH5CL.B01 P1E.V3MH5CL.H55	P1E.V3MH5CL.D30 P1E.V3MH5CL.H56	P1E.V3MH5CL.H49 P1E.V3MH5CL.H67
	Hand shower and shelf 300x100 mm		P1E.V3MH5TL.A02 P1E.V3MH5TL.H50	P1E.V3MH5TL.B01 P1E.V3MH5TL.H55	P1E.V3MH5TL.D30 P1E.V3MH5TL.H56	P1E.V3MH5TL.H49 P1E.V3MH5TL.H67
	Hand shower on rail L670 mm, centre distance 600 mm		P1E.V3MH5BL.A02 P1E.V3MH5BL.H50	P1E.V3MH5BL.B01 P1E.V3MH5BL.H55	P1E.V3MH5BL.D30 P1E.V3MH5BL.H56	P1E.V3MH5BL.H49 P1E.V3MH5BL.H67
Vertical arm L120 mm and showerhead Ø300 mm	Hand shower and hook		P1E.V3MH6CLA02 P1E.V3MH6CL.H50	P1E.V3MH6CL.B01 P1E.V3MH6CL.H55	P1E.V3MH6CL.D30 P1E.V3MH6CL.H56	P1E.V3MH6CL.H49 P1E.V3MH6CL.H67
	Hand shower and shelf 300x100 mm		P1E.V3MH6TL.A02 P1E.V3MH6TL.H50	P1E.V3MH6TL.B01 P1E.V3MH6TL.H55	P1E.V3MH6TL.D30 P1E.V3MH6TL.H56	P1E.V3MH6TL.H49 P1E.V3MH6TL.H67
	Hand shower on rail L670 mm, centre distance 600 mm		P1E.V3MH6BLA02 P1E.V3MH6BL.H50	P1E.V3MH6BL.B01 P1E.V3MH6BL.H55	P1E.V3MH6BL.D30 P1E.V3MH6BL.H56	P1E.V3MH6BL.H49 P1E.V3MH6BL.H67

OPTION

3-JET HAND SHOWER EXTRA-COST

- EASY CLEAN nozzles
- Flowrate: 8L/min at 3bar



P00.OP3JA.A02 P00.OP3JA.H50	P00.OP3JA.B01 P00.OP3JA.H55	P00.OP3JA.D30 P00.OP3JA.H56	P00.OP3JA.H49 P00.OP3JA.H67

ALOSE

3-FUNCTION THERMOSTATIC SHOWER SETS





- Trim for thermostatic mixer with 3 outlets
- Stainless steel sky shower Ø380 mm
- Stainless steel wall-mounted shower water blade or wall-mounted body jets
- Set with single-jet hand shower and holder of your choice



PRODUCT INFORMATION

- Brass
- 130x445 mm plate
- Sky shower with EASY CLEAN nozzles Flowrate: 14.5L/min at 3bar
- Wall-mounted body jets with EASY CLEAN nozzles Flowrate: 4L/min at 3bar
- Wall-mounted shower water blade flowrate: 17L/min at 3bar
- 1.5 m Soft Touch silicone hose
- Brass single-jet hand shower with EASY CLEAN nozzles Flowrate: 8L/min at 3bar

Model shown ref. P1E.V3MH9CL.D30

PLEASE NOTE: FOR PACKS ORDERED IN FINISHES A02 AND B01, THE SKYSHOWER AND WATER BLADE WILL BE DELIVERED IN A POLISHED STAINLESS STEEL FINISH.



TO ORDER WITH ROUGH PART:

P00.THMV3H

TECHNICAL DETAILS SEE P.203



EXTENSION AVAILABLE:

P00.THAL20

TECHNICAL DETAILS SEE P.207



Stainless steel wall-mounted water blade, 300x145 mm

Hand shower and hook		P1E.V3MH9CL.A02	P1E.V3MH9CL.B01	P1E.V3MH9CL.D30	P1E.V3MH9CL.H49
		P1E.V3MH9CL.H50	P1E.V3MH9CL.H55	P1E.V3MH9CL.H56	P1E.V3MH9CL.H67
Hand shower and shelf 300x100 mm		P1E.V3MH9TL.A02	P1E.V3MH9TL.B01	P1E.V3MH9TL.D30	P1E.V3MH9TL.H49
		P1E.V3MH9TL.H50	P1E.V3MH9TL.H55	P1E.V3MH9TL.H56	P1E.V3MH9TL.H67
Hand shower on rail L670 mm, centre distance 600 mm		P1E.V3MH9BL.A02	P1E.V3MH9BL.B01	P1E.V3MH9BL.D30	P1E.V3MH9BL.H49
		P1E.V3MH9BL.H50	P1E.V3MH9BL.H55	P1E.V3MH9BL.H56	P1E.V3MH9BL.H67



6 round built-in side jets Ø90 mm

Hand shower and hook		P1E.V3MH9CJ.A02	P1E.V3MH9CJ.B01	P1E.V3MH9CJ.D30	P1E.V3MH9CJ.H49
		P1E.V3MH9CJ.H50	P1E.V3MH9CJ.H55	P1E.V3MH9CJ.H56	P1E.V3MH9CJ.H67
Hand shower and shelf 300x100 mm		P1E.V3MH9TJ.A02	P1E.V3MH9TJ.B01	P1E.V3MH9TJ.D30	P1E.V3MH9TJ.H49
		P1E.V3MH9TJ.H50	P1E.V3MH9TJ.H55	P1E.V3MH9TJ.H56	P1E.V3MH9TJ.H67
Hand shower on rail L670 mm, centre distance 600 mm		P1E.V3MH9BJ.A02	P1E.V3MH9BJ.B01	P1E.V3MH9BJ.D30	P1E.V3MH9BJ.H49
		P1E.V3MH9BJ.H50	P1E.V3MH9BJ.H55	P1E.V3MH9BJ.H56	P1E.V3MH9BJ.H67

OPTION

3-JET HAND SHOWER EXTRA-COST

- EASY CLEAN nozzles
- Flowrate: 8L/min at 3bar



P00.OP3JA.A02	P00.OP3JA.B01	P00.OP3JA.D30	P00.OP3JA.H49
P00.OP3JA.H50	P00.OP3JA.H55	P00.OP3JA.H56	P00.OP3JA.H67

ALOSE

3-FUNCTION THERMOSTATIC SHOWER SETS



- Trim for thermostatic mixer with 3 outlets
- Stainless steel sky shower 380x380 mm with central jet
- Set with single-jet hand shower and holder of your choice

PRODUCT INFORMATION

- Brass
- 130x445 mm plate
- Sky shower with EASY CLEAN nozzles
  Sky shower flowrate: 14.5L/min at 3bar
  Central jet flowrate: 20L/min at 3bar
- 1.5 m Soft Touch silicone hose
- Brass single-jet hand shower with EASY CLEAN nozzles
  Flowrate: 8L/min at 3bar

Model shown ref. P1E.V3MH11C.D30

PLEASE NOTE: FOR PACKS ORDERED IN FINISHES A02 AND B01, THE SKYSHOWER WILL BE DELIVERED IN A POLISHED STAINLESS STEEL FINISH.





TO ORDER WITH ROUGH PART:

P00.THMV3H

TECHNICAL DETAILS SEE P.203



EXTENSION AVAILABLE:

P00.THAL20

TECHNICAL DETAILS SEE P.207

Skyshower 380x380 mm with central jet	Hand shower and hook		P1E.V3MH11C.A02	P1E.V3MH11C.B01	P1E.V3MH11C.D30	P1E.V3MH11C.H49
			P1E.V3MH11C.H50	P1E.V3MH11C.H55	P1E.V3MH11C.H56	P1E.V3MH11C.H67
	Hand shower and shelf 300x100 mm		P1E.V3MH11T.A02	P1E.V3MH11T.B01	P1E.V3MH11T.D30	P1E.V3MH11T.H49
			P1E.V3MH11T.H50	P1E.V3MH11T.H55	P1E.V3MH11T.H56	P1E.V3MH11T.H67
	Hand shower on rail L670 mm, centre distance 600 mm		P1E.V3MH11B.A02	P1E.V3MH11B.B01	P1E.V3MH11B.D30	P1E.V3MH11B.H49
			P1E.V3MH11B.H50	P1E.V3MH11B.H55	P1E.V3MH11B.H56	P1E.V3MH11B.H67

OPTION

3-JET HAND SHOWER EXTRA-COST

- EASY CLEAN nozzles
- Flowrate: 8L/min at 3bar



P00.OP3JA.A02	P00.OP3JA.B01	P00.OP3JA.D30	P00.OP3JA.H49
P00.OP3JA.H50	P00.OP3JA.H55	P00.OP3JA.H56	P00.OP3JA.H67

ALOSE

3-FUNCTION THERMOSTATIC SHOWER SETS







- Trim for thermostatic mixer with 3 outlets and **PUSH** controls
- Stainless steel sky shower Ø380 mm with stainless steel wall-mounted shower water blade or wall-mounted body jets, or only stainless steel sky shower 380x380 mm with central jet
- Plate-mounted single-jet hand shower

PRODUCT INFORMATION

- Brass
- 470x130 mm plate
- Sky shower with EASY CLEAN nozzles Flowrate: 14.5L/min at 3bar
- Wall-mounted shower water blade flowrate: 17L/min at 3bar
- Wall-mounted body jets with EASY CLEAN nozzles Flowrate: 4L/min at 3bar
- Sky shower with EASY CLEAN nozzles Sky shower flowrate: 14.5L/min at 3bar Central jet flowrate: 20L/min at 3bar
- 1.5 m Soft Touch silicone hose
- Brass single-jet hand shower with EASY CLEAN nozzles Flowrate: 8L/min at 3bar

Model shown ref. P1E.P3MRX9L.D30

PLEASE NOTE: FOR PACKS ORDERED IN FINISHES A02 AND B01, THE SKYSHOWERS AND WATER BLADES WILL BE DELIVERED IN A POLISHED STAINLESS STEEL FINISH.



TO ORDER WITH ROUGH PART:

P00.THMP3RX1

TECHNICAL DETAILS SEE P.204



EXTENSION AVAILABLE:

P00.THAL20

TECHNICAL DETAILS SEE P.207

Skyshower Ø380 mm	Stainless steel wall-mounted water blade, 300x145 mm		P1E.P3MRX9L.A02	P1E.P3MRX9L.B01	P1E.P3MRX9L.D30	P1E.P3MRX9L.H49
			P1E.P3MRX9L.H50	P1E.P3MRX9L.H55	P1E.P3MRX9L.H56	P1E.P3MRX9L.H67
	6 round built-in side jets Ø90 mm		P1E.P3MRX9J.A02	P1E.P3MRX9J.B01	P1E.P3MRX9J.D30	P1E.P3MRX9J.H49
			P1E.P3MRX9J.H50	P1E.P3MRX9J.H55	P1E.P3MRX9J.H56	P1E.P3MRX9J.H67
	Skyshower 380x380 mm with central jet		P1E.P3MRX11.A02	P1E.P3MRX11.B01	P1E.P3MRX11.D30	P1E.P3MRX11.H49
			P1E.P3MRX11.H50	P1E.P3MRX11.H55	P1E.P3MRX11.H56	P1E.P3MRX11.H67

OPTION

3-JET HAND SHOWER EXTRA-COST

- EASY CLEAN nozzles
- Flowrate: 8L/min at 3bar



P00.OP3JA.A02	P00.OP3JA.B01	P00.OP3JA.D30	P00.OP3JA.H49
P00.OP3JA.H50	P00.OP3JA.H55	P00.OP3JA.H56	P00.OP3JA.H67

ALOSE

3-FUNCTION THERMOSTATIC SHOWER SETS







- Trim for thermostatic mixer with 3 outlets
- Stainless steel sky shower Ø380 mm with stainless steel wall-mounted shower water blade or wall-mounted body jets, or only stainless steel sky shower 380x380 mm with central jet
- Plate-mounted single-jet hand shower

PRODUCT INFORMATION

- Brass
- 550x130 mm plate
- Sky shower with EASY CLEAN nozzles
  Flowrate: 14.5L/min at 3bar
- Wall-mounted shower water blade flowrate: 17L/min at 3bar
- Wall-mounted body jets with EASY CLEAN nozzles
  Flowrate: 4L/min at 3bar
- Sky shower with EASY CLEAN nozzles
  Sky shower flowrate: 14.5L/min at 3bar
  Central jet flowrate: 20L/min at 3bar
- 1.5 m Soft Touch silicone hose
- Brass single-jet hand shower with EASY CLEAN nozzles
  Flowrate: 8L/min at 3bar

Model shown ref. P1E.V3MRX9L.D30

PLEASE NOTE: FOR PACKS ORDERED IN FINISHES A02 AND B01, THE SKYSHOWERS AND WATER BLADES WILL BE DELIVERED IN A POLISHED STAINLESS STEEL FINISH.



TO ORDER WITH ROUGH PART:

P00.THMV3RX1

TECHNICAL DETAILS SEE P.207



EXTENSION AVAILABLE:

P00.THAL20

TECHNICAL DETAILS SEE P.207

Skyshower Ø380 mm	Stainless steel wall-mounted water blade, 300x145 mm		P1E.V3MRX9L.A02	P1E.V3MRX9L.B01	P1E.V3MRX9L.D30	P1E.V3MRX9L.H49
			P1E.V3MRX9L.H50	P1E.V3MRX9L.H55	P1E.V3MRX9L.H56	P1E.V3MRX9L.H67
	6 round built-in side jets Ø90 mm		P1E.V3MRX9J.A02	P1E.V3MRX9J.B01	P1E.V3MRX9J.D30	P1E.V3MRX9J.H49
			P1E.V3MRX9J.H50	P1E.V3MRX9J.H55	P1E.V3MRX9J.H56	P1E.V3MRX9J.H67
	Skyshower 380x380 mm with central jet		P1E.V3MRXT1.A02	P1E.V3MRXT1.B01	P1E.V3MRXT1.D30	P1E.V3MRXT1.H49
			P1E.V3MRXT1.H50	P1E.V3MRXT1.H55	P1E.V3MRXT1.H56	P1E.V3MRXT1.H67

OPTION

3-JET HAND SHOWER EXTRA-COST

- EASY CLEAN nozzles
- Flowrate: 8L/min at 3bar



P00.OP3JA.A02	P00.OP3JA.B01	P00.OP3JA.D30	P00.OP3JA.H49
P00.OP3JA.H50	P00.OP3JA.H55	P00.OP3JA.H56	P00.OP3JA.H67



ALOSE

SHOWER DRAINS

Drains for walk-in showers and masonry showers, bottom outlet



FULL COVER GRID



TILE-READY COVER GRID



DECOR COVER GRID

☐ 100 mm

INSTRUCTION MANUAL

		P00.763B100C50 • Flowrate: 30L/min P00.763B100C50.A08 P00.763B100C50.A09 P00.763B100C50.D30 P00.763B100C51.H49 P00.763B100C50.H50 P00.763B100C50.H55 P00.763B100C50.H56 P00.763B100C50.H67

☐ 125 mm

INSTRUCTION MANUAL

P00.763B125A50 • Flowrate: 20L/min P00.763B125A50.A08 P00.763B125A50.A09 P00.763B125A50.D30 P00.763B125A50.H49 P00.763B125A50.H50 P00.763B125A50.H55 P00.763B125A50.H56 P00.763B125A50.H67	**P00.763B125B50** • Flowrate: 20L/min P00.763B125B50.A08 P00.763B125B50.A09 P00.763B125B50.D30 P00.763B125B50.H49 P00.763B125B50.H50 P00.763B125B50.H55 P00.763B125B50.H56 P00.763B125B50.H67	**P00.763B125C50** • Flowrate: 30L/min P00.763B125C50.A08 P00.763B125C50.A09 P00.763B125C50.D30 P00.763B125C50.H49 P00.763B125C50.H50 P00.763B125C50.H55 P00.763B125C50.H56 P00.763B125C50.H67

☐ 150 mm

INSTRUCTION MANUAL

P00.763B150A50 • Flowrate: 30L/min P00.763B150A50.A08 P00.763B150A50.A09 P00.763B150A50.D30 P00.763B150A50.H49 P00.763B150A50.H50 P00.763B150A50.H55 P00.763B150A50.H56 P00.763B150A50.H67	**P00.763B150B50** • Flowrate: 30L/min P00.763B150B50.A08 P00.763B150B50.A09 P00.763B150B50.D30 P00.763B150B50.H49 P00.763B150B50.H50 P00.763B150B50.H55 P00.763B150B50.H56 P00.763B150B50.H67	**P00.763B150C50** • Flowrate: 30L/min P00.763B150C50.A08 P00.763B150C50.A09 P00.763B150C50.D30 P00.763B150C50.H49 P00.763B150C50.H50 P00.763B150C50.H55 P00.763B150C50.H56 P00.763B150C50.H67

ALOSE

SHOWER DRAINS

Drains for walk-in showers and masonry showers, side outlet



FULL COVER GRID



TILE-READY COVER GRID



DECOR COVER GRID

☐ 100 mm

INSTRUCTION MANUAL

P00.764S100C50
- Flowrate: 35L/min

P00.764S100C50.A08
P00.764S100C50.A09
P00.764S100C50.D30
P00.764S100C50.H49
P00.764S100C50.H50
P00.764S100C50.H55
P00.764S100C50.H56
P00.764S100C50.H67

☐ 125 mm

INSTRUCTION MANUAL

P00.764S125A50
- Flowrate: 30L/min

P00.764S125A50.A08
P00.764S125A50.A09
P00.764S125A50.D30
P00.764S125A50.H49
P00.764S125A50.H50
P00.764S125A50.H55
P00.764S125A50.H56
P00.764S125A50.H67

P00.764S125B50
- Flowrate: 30L/min

P00.764S125B50.A08
P00.764S125B50.A09
P00.764S125B50.D30
P00.764S125B50.H49
P00.764S125B50.H50
P00.764S125B50.H55
P00.764S125B50.H56
P00.764S125B50.H67

P00.764S125C50
- Flowrate: 35L/min

P00.764S125C50.A08
P00.764S125C50.A09
P00.764S125C50.D30
P00.764S125C50.H49
P00.764S125C50.H50
P00.764S125C50.H55
P00.764S125C50.H56
P00.764S125C50.H67

☐ 150 mm

INSTRUCTION MANUAL

P00.764S150A50
- Flowrate: 40L/min

P00.764S150A50.A08
P00.764S150A50.A09
P00.764S150A50.D30
P00.764S150A50.H49
P00.764S150A50.H50
P00.764S150A50.H55
P00.764S150A50.H56
P00.764S150A50.H67

P00.764S150B50
- Flowrate: 40L/min

P00.764S150B50.A08
P00.764S150B50.A09
P00.764S150B50.D30
P00.764S150B50.H49
P00.764S150B50.H50
P00.764S150B50.H55
P00.764S150B50.H56
P00.764S150B50.H67

P00.764S150C50
- Flowrate: 40L/min

P00.764S150C50.A08
P00.764S150C50.A09
P00.764S150C50.D30
P00.764S150C50.H49
P00.764S150C50.H50
P00.764S150C50.H55
P00.764S150C50.H56
P00.764S150C50.H67



ALOSE

SHOWER DRAINS

Linear drains for walk-in showers and masonry showers, side outlet

- **Flowrate: 45L/min**





	FULL COVER GRID	TILE-READY COVER GRID
700 mm	P00.7625700A50.A08 P00.7625700A50.A09 P00.7625700A50.D30 P00.7625700A50.H49 P00.7625700A50.H50 P00.7625700A50.H55 P00.7625700A50.H56 P00.7625700A50.H67	P00.7625700B50.A00
800 mm	P00.7625800A50.A08 P00.7625800A50.A09 P00.7625800A50.D30 P00.7625800A50.H49 P00.7625800A50.H50 P00.7625800A50.H55 P00.7625800A50.H56 P00.7625800A50.H67	P00.7625800B50.A00
900 mm	P00.7625900A50.A08 P00.7625900A50.A09 P00.7625900A50.D30 P00.7625900A50.H49 P00.7625900A50.H50 P00.7625900A50.H55 P00.7625900A50.H56 P00.7625900A50.H67	P00.7625900B50.A00

INSTRUCTION MANUAL



ALOSE

BIDET & TOILET



P1E.6504

Single lever bidet mixer with waste

- Brass
- Supplied with 1¼" click waste
- Cold start and EASY FIX system
- Overall height: 188 mm - Maximum spout projection: 114 mm
- Flowrate: 8.4L/min at 3bar

P1E.6504.A02 P1E.6504.B01 P1E.6504.D30 P1E.6504.H49
P1E.6504.H50 P1E.6504.H55 P1E.6504.H56 P1E.6504.H67



P1E.5840/11

WC douche set including: trigger spray, hose and wall outlet with stop lever

- Brass
- 1.25 m Soft Touch silicone hose
- Flowrate: 8L/min at 3bar

P1E.5840/11.A02 P1E.5840/11.B01 P1E.5840/11.D30 P1E.5840/11.H49
P1E.5840/11.H50 P1E.5840/11.H55 P1E.5840/11.H56 P1E.5840/11.H67



P1E.5840SPB

Trim for WC douche including: trigger spray, wall mounted single lever mixer, hose, wall outlet with integrated elbow with safety stopper

- Brass
- Ceramic cartridge
- 1.25 m Soft Touch silicone hose
- Flowrate: 8L/min at 3bar



TO ORDER WITH ROUGH PART:

P00.6541SPA

TECHNICAL DETAILS SEE P.200

P1E.5840SPB.A02 P1E.5840SPB.B01 P1E.5840SPB.D30 P1E.5840SPB.H49
P1E.5840SPB.H50 P1E.5840SPB.H55 P1E.5840SPB.H56 P1E.5840SPB.H67

ALOSE

ACCESSORIES



P1E.538A

Wall mounted WC paper holder without cover

- **Width: 133 mm**

P1E.538A.A02 P1E.538A.B01 P1E.538A.D30 P1E.538A.H49
P1E.538A.H50 P1E.538A.H55 P1E.538A.H56 P1E.538A.H67



P1E.538AC

Wall mounted WC paper holder with cover

- **Width: 125 mm**

P1E.538AC.A02 P1E.538AC.B01 P1E.538AC.D30 P1E.538AC.H49
P1E.538AC.H50 P1E.538AC.H55 P1E.538AC.H56 P1E.538AC.H67



P1E.542

Wall mounted WC reserve paper holder

- **Height: 146 mm**

P1E.542.A02 P1E.542.B01 P1E.542.D30 P1E.542.H49
P1E.542.H50 P1E.542.H55 P1E.542.H56 P1E.542.H67



P1E.4720CJ

Stainless steel wall mounted WC brush with cover and holder

- **Height: 408 mm**
- **WC brush holder Ø80 mm**

P1E.4720CJ.A08 P1E.4720CJ.D30 P1E.4720CJ.H49
P1E.4720CJ.H50 P1E.4720CJ.H55 P1E.4720CJ.H56 P1E.4720CJ.H67

ALOSE

ACCESSORIES



P1E.613M

Wall mounted liquid soap dispenser, with lever control

- **Height: 148 mm**

P1E.613M.A02 P1E.613M.B01 P1E.613M.D30 P1E.613M.H49
P1E.613M.H50 P1E.613M.H55 P1E.613M.H56 P1E.613M.H67



P1E.613

Wall mounted liquid soap dispenser

- **Height: 156 mm**

P1E.613.A02 P1E.613.B01 P1E.613.D30 P1E.613.H49
P1E.613.H50 P1E.613.H55 P1E.613.H56 P1E.613.H67



P1E.500

Wall mounted glass soap dish

- **110 mm soap dish**

P1E.500.A02 P1E.500.B01 P1E.500.D30 P1E.500.H49
P1E.500.H50 P1E.500.H55 P1E.500.H56 P1E.500.H67



P1E.536

Wall mounted glass tumbler and holder

- **Height: 108 mm**

P1E.536.A02 P1E.536.B01 P1E.536.D30 P1E.536.H49
P1E.536.H50 P1E.536.H55 P1E.536.H56 P1E.536.H67

ALOSE

ACCESSORIES



P1E.517
Single robe hook

- **Length: 44 mm**

P1E.517.A02 P1E.517.B01 P1E.517.D30 P1E.517.H49
P1E.517.H50 P1E.517.H55 P1E.517.H56 P1E.517.H67



P1E.521/60
Single towel rail, fixed rail, large model

- **600 mm centres**

P1E.521/60.A02 P1E.521/60.B01 P1E.521/60.D30 P1E.521/60.H49
P1E.521/60.H50 P1E.521/60.H55 P1E.521/60.H56 P1E.521/60.H67



P1E.521/45
Single towel rail, fixed rail, medium model

- **450 mm centres**

P1E.521/45.A02 P1E.521/45.B01 P1E.521/45.D30 P1E.521/45.H49
P1E.521/45.H50 P1E.521/45.H55 P1E.521/45.H56 P1E.521/45.H67

ALOSE

ACCESSORIES



P1E.504P

Single towel ring

- Ø170 mm

P1E.504P.A02 P1E.504P.B01 P1E.504P.D30 P1E.504P.H49
P1E.504P.H50 P1E.504P.H55 P1E.504P.H56 P1E.504P.H67



P1E.564

Glass shelf with supports, large model

- SECURIT glass, 10 mm thick
- Length: 600 mm
- Depth: 139 mm

P1E.564.A02 P1E.564.B01 P1E.564.D30 P1E.564.H49
P1E.564.H50 P1E.564.H55 P1E.564.H56 P1E.564.H67



P1E.564/45

Glass shelf with supports, medium model

- SECURIT glass, 10 mm thick
- Length: 450 mm
- Depth: 119 mm

P1E.564/45.A02 P1E.564/45.B01 P1E.564/45.D30 P1E.564/45.H49
P1E.564/45.H50 P1E.564/45.H55 P1E.564/45.H56 P1E.564/45.H67



Collection presented in UMBER MAT PVD finish (H67)

ESTRAN

Where land meets sea, Estran symbolises balance. Its generous curves echo the gentle ebb and flow of the tides, expressing a harmonious design language rooted in nature and tranquillity.

ESTRAN





ESTRAN

BASIN



P1C.151

Rim mounted 3-hole basin mixer with waste

- Low-lead brass
- Supplied with 1¼″ click waste
- Overall height: 157 mm - Maximum spout projection: 180 mm
- Flowrate: 8.4L/min at 3bar

P1C.151.A02 P1C.151.B01 P1C.151.D30 P1C.151.H49
P1C.151.H50 P1C.151.H55 P1C.151.H56 P1C.151.H67



P1C.152

Rim mounted 3-hole basin mixer with waste, high spout

- Low-lead brass
- Supplied with 1¼″ click waste
- Overall height: 280 mm - Maximum spout projection: 160 mm
- Flowrate: 8.4L/min at 3bar

P1C.152.A02 P1C.152.B01 P1C.152.D30 P1C.152.H49
P1C.152.H50 P1C.152.H55 P1C.152.H56 P1C.152.H67

P1C.6500

Single lever basin mixer with waste

- Low-lead brass
- Supplied with 1¼″ click waste
- COLD START ceramic cartridge with temperature stop and EASY FIX system
- Overall height: 183 mm - Maximum spout projection: 131 mm
- Flowrate: 8.4L/min at 3bar



P1C.6500.A02 P1C.6500.B01 P1C.6500.D30 P1C.6500.H49
P1C.6500.H50 P1C.6500.H55 P1C.6500.H56 P1C.6500.H67

P1C.6500SV

Single lever basin mixer without waste

- FEATURES: SEE ABOVE



P1C.6500SV.A02 P1C.6500SV.B01 P1C.6500SV.D30 P1C.6500SV.H49
P1C.6500SV.H50 P1C.6500SV.H55 P1C.6500SV.H56 P1C.6500SV.H67

ESTRAN

BASIN



P1C.6500D

Single lever basin mixer with waste, medium size

- **Low-lead brass**
- **Supplied with 1¼" click waste**
- **COLD START ceramic cartridge with temperature stop and EASY FIX system**
- **Overall height: 273 mm - Maximum spout projection: 151 mm**
- **Flowrate: 8.4L/min at 3bar**

P1C.6500D.A02 P1C.6500D.B01 P1C.6500D.D30 P1C.6500D.H49
P1C.6500D.H50 P1C.6500D.H55 P1C.6500D.H56 P1C.6500D.H57

P1C.6500DSV

Single lever basin mixer without waste, medium size

- **FEATURES: SEE ABOVE**

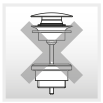

P1C.6500DSV.A02 P1C.6500DSV.B01 P1C.6500DSV.D30 P1C.6500DSV.H49
P1C.6500DSV.H50 P1C.6500DSV.H55 P1C.6500DSV.H56 P1C.6500DSV.H67



P1C.6500H

Single lever basin mixer with waste, high model

- **Low-lead brass**
- **Supplied with 1¼" click waste**
- **COLD START ceramic cartridge with temperature stop and EASY FIX system**
- **Overall height: 331 mm - Maximum spout projection: 151 mm**
- **Flowrate: 8.4L/min at 3bar**

P1C.6500H.A02 P1C.6500H.B01 P1C.6500H.D30 P1C.6500H.H49
P1C.6500H.H50 P1C.6500H.H55 P1C.6500H.H56 P1C.6500H.H57

P1C.6500HSV

Single lever basin mixer without waste, high model

- **FEATURES: SEE ABOVE**



P1C.6500HSV.A02 P1C.6500HSV.B01 P1C.6500HSV.D30 P1C.6500HSV.H49
P1C.6500HSV.H50 P1C.6500HSV.H55 P1C.6500HSV.H56 P1C.6500HSV.H67

ESTRAN





ESTRAN

BASIN



P1C.40GB

Trim only for wall mounted 3-hole basin mixer, without waste

- **Low-lead brass**
- **Maximum spout projection: 180 mm**
- **Flowrate: 8.4L/min at 3bar**





TO ORDER WITH ROUGH PART:

P00.40AC

TECHNICAL DETAILS SEE P.200

P1C.40GB.A02 P1C.40GB.B01 P1C.40GB.D30 P1C.40GB.H49
P1C.40GB.H50 P1C.40GB.H55 P1C.40GB.H56 P1C.40GB.H67



P1C.40SGB

Trim only for wall mounted 3-hole basin mixer, long spout, without waste

- **Low-lead brass**
- **Maximum spout projection: 230 mm**
- **Flowrate: 8.4L/min at 3bar**

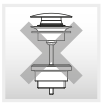



TO ORDER WITH ROUGH PART:

P00.40AC

TECHNICAL DETAILS SEE P.200

P1C.40SGB.A02 P1C.40SGB.B01 P1C.40SGB.D30 P1C.40SGB.H49
P1C.40SGB.H50 P1C.40SGB.H55 P1C.40SGB.H56 P1C.40SGB.H67



P1C.6541SPB

Trim for wall-mounted built-in basin mixer with spout, without waste

- **Low-lead brass**
- **Ceramic cartridge with temperature stop**
- **Maximum spout projection: 180 mm**
- **Flowrate: 8.4L/min at 3bar**





TO ORDER WITH ROUGH PART:

P00.6541SPA

TECHNICAL DETAILS SEE P.200

P1C.6541SPB.A02 P1C.6541SPB.B01 P1C.6541SPB.D30 P1C.6541SPB.H49
P1C.6541SPB.H50 P1C.6541SPB.H55 P1C.6541SPB.H56 P1C.6541SPB.H67



P1C.6541SPBL

Trim for wall-mounted built-in basin mixer with long spout, without waste

- **Low-lead brass**
- **Ceramic cartridge with temperature stop**
- **Maximum spout projection: 230 mm**
- **Flowrate: 8.4L/min at 3bar**

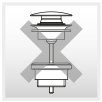



TO ORDER WITH ROUGH PART:

P00.6541SPA

TECHNICAL DETAILS SEE P.200

P1C.6541SPBL.A02 P1C.6541SPBL.B01 P1C.6541SPBL.D30 P1C.6541SPBL.H49
P1C.6541SPBL.H50 P1C.6541SPBL.H55 P1C.6541SPBL.H56 P1C.6541SPBL.H67

ESTRAN

BASIN WASTE



P00.316KB

Click waste, supplied with locking kit for free-flowing basin

- Brass
- 1¼" connection

P00.316KB.A02 P00.316KB.B01 P00.316KB.D30 P00.316KB.H49
P00.316KB.H50 P00.316KB.H55 P00.316KB.H56 P00.316KB.H67



P00.309SP

Bottle trap only for waste

- Brass
- Height: min. 80 mm - max. 176 mm
- Length 326 mm
- Tube Ø32 mm

P00.309SP.A02 P00.309SP.B01 P00.309SP.D30 P00.309SP.H49
P00.309SP.H50 P00.309SP.H55 P00.309SP.H56 P00.309SP.H57



P00.308TP

Adjustable bottle trap

- Brass
- Height: min. 85 mm - max. 130 mm
- Length 326 mm
- Tube Ø32 mm

P00.308TP.A02 P00.308TP.B01 P00.308TP.D30 P00.308TP.H49
P00.308TP.H50 P00.308TP.H55 P00.308TP.H56 P00.308TP.H57



P00.315LP

Adjustable "P" trap

- Brass
- Height: min. 140 mm - max. 196 mm
- Length 267 mm
- Tube Ø32 mm

P00.315LP.A02 P00.315LP.B01 P00.315LP.D30 P00.315LP.H49
P00.315LP.H50 P00.315LP.H55 P00.315LP.H56 P00.315LP.H57



BATH



P1C.112BSGBH

Bath/shower mixer, diverter to high spout and hand shower

- Brass
- Spout: Overall height 352 mm
  Maximum spout projection: 225 mm
  Flowrate: 35L/min at 3bar
- 1.5 m Soft Touch silicone hose
- Brass single-jet hand shower
  with EASY CLEAN nozzles
  Flowrate: 8L/min at 3bar

P1C.112BSGBH.A02 P1C.112BSGBH.B01 P1C.112BSGBH.D30 P1C.112BSGBH.H49
P1C.112BSGBH.H50 P1C.112BSGBH.H55 P1C.112BSGBH.H56 P1C.112BSGBH.H67



TO ORDER OPTIONAL:

P00.5598
Hose reservoir
TECHNICAL DETAILS SEE P.207



P1C.112BSGBB

Bath/shower mixer, diverter to low spout and hand shower

- Brass
- Spout: Overall height 163 mm
  Maximum spout projection: 230 mm
  Flowrate: 35L/min at 3bar
- 1.5 m Soft Touch silicone hose
- Brass single-jet hand shower
  with EASY CLEAN nozzles
  Flowrate: 8L/min at 3bar

P1C.112BSGBB.A02 P1C.112BSGBB.B01 P1C.112BSGBB.D30 P1C.112BSGBB.H49
P1C.112BSGBB.H50 P1C.112BSGBB.H55 P1C.112BSGBB.H56 P1C.112BSGBB.H67



TO ORDER OPTIONAL:

P00.5598
Hose reservoir
TECHNICAL DETAILS SEE P.207



P1C.1132SGH

Bath mixer with high spout, and hand shower supplied by progressive cartridge mix

- Brass
- Spout: Overall height 316 mm
  Maximum spout projection: 215 mm
  Flowrate: 35L/min at 3bar
- 1.5 m Soft Touch silicone hose
- Brass single-jet hand shower
  with EASY CLEAN nozzles
  Flowrate: 8L/min at 3bar
- Manual mixing valve

P1C.1132SGH.A02 P1C.1132SGH.B01 P1C.1132SGH.D30 P1C.1132SGH.H49
P1C.1132SGH.H50 P1C.1132SGH.H55 P1C.1132SGH.H56 P1C.1132SGH.H67



TO ORDER OPTIONAL:

P00.5598
Hose reservoir
TECHNICAL DETAILS SEE P.207



P1C.1132SG

Bath mixer with hand shower supplied by progressive cartridge mixer

- Brass
- Spout: Overall height 154 mm
  Maximum spout projection: 220 mm
  Flowrate: 35L/min at 3bar
- 1.5 m Soft Touch silicone hose
- Brass single-jet hand shower
  with EASY CLEAN nozzles
  Flowrate: 8L/min at 3bar
- Manual mixing valve

P1C.1132SG.A02 P1C.1132SG.B01 P1C.1132SG.D30 P1C.1132SG.H49
P1C.1132SG.H50 P1C.1132SG.H55 P1C.1132SG.H56 P1C.1132SG.H67



TO ORDER OPTIONAL:

P00.5598
Hose reservoir
TECHNICAL DETAILS SEE P.207



BATH



P1C.6518SB

Free-standing bath mixer with hand shower, without mounting plate

- **Brass**
- **Free-standing spout:**
  Spout outlet height: 771 mm
  Maximum spout projection: 168 mm
  Flowrate: 25L/min at 3bar
- **1.5 m Soft Touch silicone hose**
- **Brass single-jet hand shower with EASY CLEAN nozzles**
  Flowrate: 8L/min at 3bar
- **Manual mixing valve**



TO ORDER WITH BUILT-IN FIXING PLATE:

P00.6518SA

TECHNICAL DETAILS SEE P.201

P1C.6518SB.A02 P1C.6518SB.B01 P1C.6518SB.D30 P1C.6518SB.H49
P1C.6518SB.H50 P1C.6518SB.H55 P1C.6518SB.H56 P1C.6518SB.H67

ESTRAN

THERMOSTATIC BATH



P1C.6510BC

Thermostatic bath shower mixer with hook, hose and hand shower

- Brass
- Thermostatic control with temperature stop 38°C, max. 50°C
- Anti-scald safety THERMO COOL CONTACT
- 150 mm centres
- Maximum spout projection: 183 mm
  Flowrate: 20L/min at 3bar
- 1.5 m Soft Touch silicone hose
- Brass single-jet hand shower
  with EASY CLEAN nozzles
  Flowrate: 8L/min at 3bar

P1C.6510BC.A02 P1C.6510BC.B01 P1C.6510BC.D30 P1C.6510BC.H49
P1C.6510BC.H50 P1C.6510BC.H55 P1C.6510BC.H56 P1C.6510BC.H67



P1C.6510BB

Thermostatic bath shower mixer with sliding bar, hose and hand shower

- Brass
- Thermostatic control with temperature stop 38°C, max. 50°C
- Anti-scald safety THERMO COOL CONTACT
- 150 mm centres
- Maximum spout projection: 183 mm
  Flowrate: 20L/min at 3bar
- 1.5 m Soft Touch silicone hose
- Brass single-jet hand shower
  with EASY CLEAN nozzles
  Flowrate: 8L/min at 3bar
- Slidebar height: 670 mm, 600 mm centres

P1C.6510BB.A02 P1C.6510BB.B01 P1C.6510BB.D30 P1C.6510BB.H49
P1C.6510BB.H50 P1C.6510BB.H55 P1C.6510BB.H56 P1C.6510BB.H67

OPTION

3-JET HAND SHOWER EXTRA-COST

- EASY CLEAN nozzles
- Flowrate: 8L/min at 3bar



P00.OP3JA.A02 P00.OP3JA.B01 P00.OP3JA.D30 P00.OP3JA.H49
P00.OP3JA.H50 P00.OP3JA.H55 P00.OP3JA.H56 P00.OP3JA.H67

ESTRAN

2-FUNCTION BATH SETS



- Trim only for manual mixing valve
- Automatic diverter
- Bathtub spout
- Set with single-jet hand shower and holder of your choice

PRODUCT INFORMATION

- Brass
- Maximum spout projection: 180 mm Flowrate: 25L/min at 3bar
- 1.5 m Soft Touch silicone hose
- Brass single-jet hand shower with EASY CLEAN nozzles Flowrate: 8L/min at 3bar

Model shown ref. P1C.6550RCSG.H67



TO ORDER WITH ROUGH PART:

P00.6550SPA

TECHNICAL DETAILS SEE P.201

Hand shower and hook



P1C.6550RCS.A02 P1C.6550RCS.B01 P1C.6550RCS.D30 P1C.6550RCS.H49
P1C.6550RCS.H50 P1C.6550RCS.H55 P1C.6550RCS.H56 P1C.6550RCS.H67

Hand shower on rail
L 670 mm, centre distance 600 mm



P1C.6550RBS.A02 P1C.6550RBS.B01 P1C.6550RBS.D30 P1C.6550RBS.H49
P1C.6550RBS.H50 P1C.6550RBS.H55 P1C.6550RBS.H56 P1C.6550RBS.H67



- Trim only for wall-mounted 3-hole bath mixer
- Trim only for manual mixing valve
- Set with single-jet hand shower and holder of your choice

PRODUCT INFORMATION

- Brass
- Maximum spout projection: 180 mm Flowrate: 35L/min at 3bar
- 1.5 m Soft Touch silicone hose
- Brass single-jet hand shower with EASY CLEAN nozzles Flowrate: 8L/min at 3bar

Model shown ref. P1C.41GM6561.H67



TO ORDER WITH ROUGH PART:

P00.40DMAC

TECHNICAL DETAILS SEE P.202

Hand shower and hook



P1C.41G6561.A02 P1C.41G6561.B01 P1C.41G6561.D30 P1C.41G6561.H49
P1C.41G6561.H50 P1C.41G6561.H55 P1C.41G6561.H56 P1C.41G6561.H67

Hand shower on rail
L 670 mm, centre distance 600 mm



P1C.41G6571.A02 P1C.41G6571.B01 P1C.41G6571.D30 P1C.41G6571.H49
P1C.41G6571.H50 P1C.41G6571.H55 P1C.41G6571.H56 P1C.41G6571.H67

OPTION

3-JET HAND SHOWER EXTRA-COST

- EASY CLEAN nozzles
- Flowrate: 8L/min at 3bar



P00.0P3JA.A02 P00.0P3JA.B01 P00.0P3JA.D30 P00.0P3JA.H49
P00.0P3JA.H50 P00.0P3JA.H55 P00.0P3JA.H56 P00.0P3JA.H67

THERMOSTATIC 2-FUNCTION BATH SETS



- Trim for thermostatic mixer with 2 outlets
- Plate-mounted bathtub spout and single-jet hand shower
- Interchangeable spout and hand shower positioning

PRODUCT INFORMATION

- Brass
- 530x130 mm plate
- Maximum spout projection: 180 mm
  Flowrate: 35L/min at 3bar
- 1.5 m Soft Touch silicone hose
- Brass single-jet hand shower with EASY CLEAN nozzles
  Flowrate: 8L/min at 3bar



TO ORDER WITH ROUGH PART:

P00.THMV2X2

TECHNICAL DETAILS SEE P.202



EXTENSION AVAILABLE:

P00.THAL20

TECHNICAL DETAILS SEE P.207

P1C.BTHV2X2.A02 P1C.BTHV2X2.B01 P1C.BTHV2X2.D30 P1C.BTHV2X2.H49
P1C.BTHV2X2.H50 P1C.BTHV2X2.H55 P1C.BTHV2X2.H56 P1C.BTHV2X2.H67



- Trim for thermostatic mixer with 2 outlets and **PUSH** controls
- Bathtub spout or bath waste with integrated filling system
- Plate-mounted single-jet hand shower

PRODUCT INFORMATION

- Brass
- 380x130 mm plate
- Maximum spout projection: 180 mm
  Flowrate: 35L/min at 3bar
- 1.5 m Soft Touch silicone hose
- Brass single-jet hand shower with EASY CLEAN nozzles
  Flowrate: 8L/min at 3bar

Model shown ref. P1C.P2RDS.H67



TO ORDER WITH ROUGH PART:

P00.THMP2RX1

TECHNICAL DETAILS SEE P.202



EXTENSION AVAILABLE:

P00.THAL20

TECHNICAL DETAILS SEE P.207

Wall spout



P1C.P2RDS.A02 P1C.P2RDS.B01 P1C.P2RDS.D30 P1C.P2RDS.H49
P1C.P2RDS.H50 P1C.P2RDS.H55 P1C.P2RDS.H56 P1C.P2RDS.H67

Filling system via discharge wheel



P1C.P2RDF.A02 P1C.P2RDF.B01 P1C.P2RDF.D30 P1C.P2RDF.H49
P1C.P2RDF.H50 P1C.P2RDF.H55 P1C.P2RDF.H56 P1C.P2RDF.H67

Outlet for filling system via discharge wheel

NOT PROVIDED

P1C.BTHP2RX1.A02 P1C.BTHP2RX1.B01 P1C.BTHP2RX1.D30 P1C.BTHP2RX1.H49
P1C.BTHP2RX1.H50 P1C.BTHP2RX1.H55 P1C.BTHP2RX1.H56 P1C.BTHP2RX1.H67

OPTION

3-JET HAND SHOWER EXTRA-COST

- EASY CLEAN nozzles
- Flowrate: 8L/min at 3bar



P00.OP3JA.A02 P00.OP3JA.B01 P00.OP3JA.D30 P00.OP3JA.H49
P00.OP3JA.H50 P00.OP3JA.H55 P00.OP3JA.H56 P00.OP3JA.H67

ESTRAN

THERMOSTATIC 3-FUNCTION BATH SETS



- Trim for thermostatic mixer with 3 outlets
- Showerhead Ø300 mm with shower arm of your choice
- Bathtub spout
- Set with single-jet hand shower and holder of your choice

PRODUCT INFORMATION

- Brass
- 445x130 mm plate
- Maximum spout projection: 180 mm
  Flowrate: 35L/min at 3bar
- Brass showerhead with EASY CLEAN nozzles
  Flowrate: 9.5L/min at 3bar
- 1.5 m Soft Touch silicone hose
- Brass single-jet hand shower with EASY CLEAN nozzles
  Flowrate: 8L/min at 3bar

Model shown ref. P1C.V3MH5CS.H67





TO ORDER WITH ROUGH PART:

P00.THMV3R
Left-hand mixer tap
TECHNICAL DETAILS SEE P.203



EXTENSION AVAILABLE:

P00.THAL20
TECHNICAL DETAILS SEE P.207

 Wall arm L450 mm and showerhead Ø300 mm	Hand shower and hook		P1C.V3MH5CS.A02 P1C.V3MH5CS.B01 P1C.V3MH5CS.D30 P1C.V3MH5CS.H49 P1C.V3MH5CS.H50 P1C.V3MH5CS.H55 P1C.V3MH5CS.H56 P1C.V3MH5CS.H67
	Hand shower on rail L670 mm, centre distance 600 mm		P1C.V3MH5BS.A02 P1C.V3MH5BS.B01 P1C.V3MH5BS.D30 P1C.V3MH5BS.H49 P1C.V3MH5BS.H50 P1C.V3MH5BS.H55 P1C.V3MH5BS.H56 P1C.V3MH5BS.H67
 Vertical arm L120 mm and showerhead Ø300 mm	Hand shower and hook		P1C.V3MH6CS.A02 P1C.V3MH6CS.B01 P1C.V3MH6CS.D30 P1C.V3MH6CS.H49 P1C.V3MH6CS.H50 P1C.V3MH6CS.H55 P1C.V3MH6CS.H56 P1C.V3MH6CS.H67
	Hand shower on rail L670 mm, centre distance 600 mm		P1C.V3MH6BS.A02 P1C.V3MH6BS.B01 P1C.V3MH6BS.D30 P1C.V3MH6BS.H49 P1C.V3MH6BS.H50 P1C.V3MH6BS.H55 P1C.V3MH6BS.H56 P1C.V3MH6BS.H67

OPTION

3-JET HAND SHOWER EXTRA-COST

- EASY CLEAN nozzles
- Flowrate: 8L/min at 3bar



P00.OP3JA.A02 P00.OP3JA.B01 P00.OP3JA.D30 P00.OP3JA.H49
P00.OP3JA.H50 P00.OP3JA.H55 P00.OP3JA.H56 P00.OP3JA.H67



ESTRAN

THERMOSTATIC 3-FUNCTION BATH SETS



- Trim for thermostatic mixer with 3 outlets and **PUSH** controls
- Showerhead Ø300 mm with shower arm of your choice
- Bathtub spout or bath waste with integrated filling system
- Plate-mounted single-jet hand shower

PRODUCT INFORMATION

- Brass
- 470x130 mm plate
- Maximum spout projection: 180 mm
  Flowrate: 35L/min at 3bar
- Brass showerhead with EASY CLEAN nozzles
  Flowrate: 9.5L/min at 3bar
- 1.5 m Soft Touch silicone hose
- Brass single-jet hand shower with EASY CLEAN nozzles
  Flowrate: 8L/min at 3bar

Model shown ref. P1C.P3MRX5S.H67





TO ORDER WITH ROUGH PART:

P00.THMP3RX1

TECHNICAL DETAILS SEE P.204



EXTENSION AVAILABLE:

P00.THAL20

TECHNICAL DETAILS SEE P.207

Wall arm L450 mm and showerhead Ø300 mm	Wall spout		P1C.P3MRX5S.A02 · P1C.P3MRX5S.B01 · P1C.P3MRX5S.D30 · P1C.P3MRX5S.H49 · P1C.P3MRX5S.H50 · P1C.P3MRX5S.H55 · P1C.P3MRX5S.H56 · P1C.P3MRX5S.H67	
	Filling system via discharge wheel		P1C.P3MRX5F.A02 · P1C.P3MRX5F.B01 · P1C.P3MRX5F.D30 · P1C.P3MRX5F.H49 · P1C.P3MRX5F.H50 · P1C.P3MRX5F.H55 · P1C.P3MRX5F.H56 · P1C.P3MRX5F.H67	
	Outlet for filling system via discharge wheel	**NOT PROVIDED**	P1C.P3MRX5X.A02 · P1C.P3MRX5X.B01 · P1C.P3MRX5X.D30 · P1C.P3MRX5X.H49 · P1C.P3MRX5X.H50 · P1C.P3MRX5X.H55 · P1C.P3MRX5X.H56 · P1C.P3MRX5X.H67	
Vertical arm L120 mm and showerhead Ø300 mm	Wall spout		P1C.P3MRX6S.A02 · P1C.P3MRX6S.B01 · P1C.P3MRX6S.D30 · P1C.P3MRX6S.H49 · P1C.P3MRX6S.H50 · P1C.P3MRX6S.H55 · P1C.P3MRX6S.H56 · P1C.P3MRX6S.H67	
	Filling system via discharge wheel		P1C.P3MRX6F.A02 · P1C.P3MRX6F.B01 · P1C.P3MRX6F.D30 · P1C.P3MRX6F.H49 · P1C.P3MRX6F.H50 · P1C.P3MRX6F.H55 · P1C.P3MRX6F.H56 · P1C.P3MRX6F.H67	
	Outlet for filling system via discharge wheel	**NOT PROVIDED**	P1C.P3MRX6X.A02 · P1C.P3MRX6X.B01 · P1C.P3MRX6X.D30 · P1C.P3MRX6X.H49 · P1C.P3MRX6X.H50 · P1C.P3MRX6X.H55 · P1C.P3MRX6X.H56 · P1C.P3MRX6X.H67	

OPTION

3-JET HAND SHOWER EXTRA-COST

- EASY CLEAN nozzles
- Flowrate: 8L/min at 3bar



P00.OP3JA.A02 · P00.OP3JA.B01 · P00.OP3JA.D30 · P00.OP3JA.H49 · P00.OP3JA.H50 · P00.OP3JA.H55 · P00.OP3JA.H56 · P00.OP3JA.H67

BATH WASTE



P1C.302

Geberit bath waste, adjustable height: mini 165 mm / maxi 390 mm; adjustable projection: mini 110 mm / maxi 230 mm, outlet Ø 40 mm, - European model 150.616.21.1

- **Brass drain handle and valve**
- **For bathtub with a Ø52 mm waste opening**

P1C.302.A02 P1C.302.D30 P1C.302.H49
P1C.302.H50 P1C.302.H55 P1C.302.H56 P1C.302.H67



P1C.302GM

Geberit bath waste, big size, adjustable height: mini 165 mm / maxi 580 mm; adjustable projection: mini 110 mm / maxi 700 mm - outlet, Ø 40 mm, delivered with stylised control knob - European model 150.616.21.1

- **Brass drain handle and valve**
- **For bathtub with a Ø52 mm waste opening**

P1C.302GM.A02 P1C.302GM.D30 P1C.302GM.H49
P1C.302GM.H50 P1C.302GM.H55 P1C.302GM.H56 P1C.302GM.H67



P00.305/H

Complete manual bath click waste, for baths with integrated overflow or overflow rim

- **Brass valve and waste, plated**
- **For bathtub with a Ø52 mm waste opening, Ø70 mm cap**
- **Brass drain and plug**

P00.305/H.A02 P00.305/H.D30 P00.305/H.H49
P00.305/H.H50 P00.305/H.H55 P00.305/H.H56 P00.305/H.H67

ESTRAN

THERMOSTATIC SHOWER



P1C.6528BB

Wall mounted thermostatic shower mixer ½" with sliding bar, hose and hand shower

- Brass
- Thermostatic control with temperature stop 38°C, max. 50°C
- Anti-scald safety THERMO COOL CONTACT
- 150 mm centres
- 1.5 m Soft Touch silicone hose
- Brass single-jet hand shower
  with EASY CLEAN nozzles
  Flowrate: 8L/min at 3bar
- Slidebar height: 670 mm, 600 mm centres

P1C.6528BB.A02 P1C.6528BB.B01 P1C.6528BB.D30 P1C.6528BB.H49
P1C.6528BB.H50 P1C.6528BB.H55 P1C.6528BB.H56 P1C.6528BB.H67



P1C.6529CD

Wall mounted thermostatic shower mixer ½" with shower column, shower head Ø 200 mm, hose and hand shower

- Brass
- Thermostatic control with temperature stop 38°C, max. 50°C
- Anti-scald safety THERMO COOL CONTACT
- 150 mm centres
- Brass showerhead Ø200 mm with EASY CLEAN nozzles
  Flowrate: 9.5L/min at 3bar
- 1.5 m Soft Touch silicone hose
- Brass single-jet hand shower
  with EASY CLEAN nozzles
  Flowrate: 8L/min at 3bar
- Height: 1203 mm - Maximum showerhead projection: 458 mm - Fixing distance: 937 mm

P1C.6529CD.A02 P1C.6529CD.B01 P1C.6529CD.D30 P1C.6529CD.H49
P1C.6529CD.H50 P1C.6529CD.H55 P1C.6529CD.H56 P1C.6529CD.H67



P1C.6529CG

Wall mounted thermostatic shower mixer ½" with shower column, shower head Ø 300 mm, hand shower and hose

- Brass
- Thermostatic control with temperature stop 38°C, max. 50°C
- Anti-scald safety THERMO COOL CONTACT
- 150 mm centres
- Brass showerhead Ø300 mm with EASY CLEAN nozzles
  Flowrate: 9.5L/min at 3bar
- 1.5 m Soft Touch silicone hose
- Brass single-jet hand shower
  with EASY CLEAN nozzles
  Flowrate: 8L/min at 3bar
- Height: 1203 mm - Maximum showerhead projection: 458 mm - Fixing distance: 937 mm

P1C.6529CG.A02 P1C.6529CG.B01 P1C.6529CG.D30 P1C.6529CG.H49
P1C.6529CG.H50 P1C.6529CG.H55 P1C.6529CG.H56 P1C.6529CG.H67

OPTION

3-JET HAND SHOWER EXTRA-COST

- EASY CLEAN nozzles
- Flowrate: 8L/min at 3bar



P00.0P3JA.A02 P00.0P3JA.B01 P00.0P3JA.D30 P00.0P3JA.H49
P00.0P3JA.H50 P00.0P3JA.H55 P00.0P3JA.H56 P00.0P3JA.H67

ESTRAN

SINGLE-FUNCTION SHOWER SET



- Trim only for manual mixing valve
- Slidebar and single-jet hand shower

PRODUCT INFORMATION

- Brass
- 1.5 m Soft Touch silicone hose
- Brass single-jet hand shower with EASY CLEAN nozzles Flowrate: 8L/min at 3bar
- Slidebar height: 670 mm, 600 mm centres



TO ORDER WITH ROUGH PART:

P00.6541SPA

TECHNICAL DETAILS SEE P.200

P1C.6571SPB.A02 P1C.6571SPB.B01 P1C.6571SPB.D30 P1C.6571SPB.H49
P1C.6571SPB.H50 P1C.6571SPB.H55 P1C.6571SPB.H56 P1C.6571SPB.H67

2-FUNCTION SHOWER SETS



- Trim only for manual mixing valve
- Automatic diverter
- Showerhead Ø200 mm with wall-mounted shower arm
- Set with single-jet hand shower and holder of your choice

PRODUCT INFORMATION

- Brass
- Brass showerhead with EASY CLEAN nozzles Flowrate: 9.5L/min at 3bar
- 1.5 m Soft Touch silicone hose
- Brass single-jet hand shower with EASY CLEAN nozzles Flowrate: 8L/min at 3bar

Model shown ref. P1C.6550R1C.H67





TO ORDER WITH ROUGH PART:

P00.6550SPA

TECHNICAL DETAILS SEE P.201



Wall arm L450 mm and showerhead Ø200 mm

Hand shower and hook



P1C.6550R1C.A02 P1C.6550R1C.B01 P1C.6550R1C.D30 P1C.6550R1C.H49
P1C.6550R1C.H50 P1C.6550R1C.H55 P1C.6550R1C.H56 P1C.6550R1C.H67

Hand shower on rail L670 mm, centre distance 600 mm



P1C.6550R1B.A02 P1C.6550R1B.B01 P1C.6550R1B.D30 P1C.6550R1B.H49
P1C.6550R1B.H50 P1C.6550R1B.H55 P1C.6550R1B.H56 P1C.6550R1B.H67

OPTION

3-JET HAND SHOWER EXTRA-COST

- EASY CLEAN nozzles
- Flowrate: 8L/min at 3bar



P00.0P3JA.A02 P00.0P3JA.B01 P00.0P3JA.D30 P00.0P3JA.H49
P00.0P3JA.H50 P00.0P3JA.H55 P00.0P3JA.H56 P00.0P3JA.H67

ESTRAN

2-FUNCTION THERMOSTATIC SHOWER SETS



- Trim for thermostatic mixer with 2 outlets
- Showerhead Ø200 mm with shower arm of your choice
- Set with single-jet hand shower and holder of your choice

PRODUCT INFORMATION

- Brass
- 130x205 mm plate
- Brass showerhead with EASY CLEAN nozzles Flowrate: 9.5L/min at 3bar
- 1.5 m Soft Touch silicone hose
- Brass single-jet hand shower with EASY CLEAN nozzles Flowrate: 8L/min at 3bar

Model shown ref. P1C.D2M1C.H67





TO ORDER WITH ROUGH PART:

P00.THMD2

TECHNICAL DETAILS SEE P.204



EXTENSION AVAILABLE:

P00.THAL20

TECHNICAL DETAILS SEE P.207

Wall arm L450 mm and showerhead Ø200 mm	Hand shower and hook		P1C.D2M1C.A02 P1C.D2M1C.H50	P1C.D2M1C.B01 P1C.D2M1C.H55	P1C.D2M1C.D30 P1C.D2M1C.H56	P1C.D2M1C.H49 P1C.D2M1C.H67
	Hand shower and shelf 300x100 mm		P1C.D2M1T.A02 P1C.D2M1T.H50	P1C.D2M1T.B01 P1C.D2M1T.H55	P1C.D2M1T.D30 P1C.D2M1T.H56	P1C.D2M1T.H49 P1C.D2M1T.H67
	Hand shower on rail L670 mm, centre distance 600 mm		P1C.D2M1B.A02 P1C.D2M1B.H50	P1C.D2M1B.B01 P1C.D2M1B.H55	P1C.D2M1B.D30 P1C.D2M1B.H56	P1C.D2M1B.H49 P1C.D2M1B.H67
Vertical arm L120 mm and showerhead Ø200 mm	Hand shower and hook		P1C.D2M2C.A02 P1C.D2M2C.H50	P1C.D2M2C.B01 P1C.D2M2C.H55	P1C.D2M2C.D30 P1C.D2M2C.H56	P1C.D2M2C.H49 P1C.D2M2C.H67
	Hand shower and shelf 300x100 mm		P1C.D2M2T.A02 P1C.D2M2T.H50	P1C.D2M2T.B01 P1C.D2M2T.H55	P1C.D2M2T.D30 P1C.D2M2T.H56	P1C.D2M2T.H49 P1C.D2M2T.H67
	Hand shower on rail L670 mm, centre distance 600 mm		P1C.D2M2B.A02 P1C.D2M2B.H50	P1C.D2M2B.B01 P1C.D2M2B.H55	P1C.D2M2B.D30 P1C.D2M2B.H56	P1C.D2M2B.H49 P1C.D2M2B.H67

OPTION

3-JET HAND SHOWER EXTRA-COST

- EASY CLEAN nozzles
- Flowrate: 8L/min at 3bar



P00.OP3JA.A02 P00.OP3JA.H50	P00.OP3JA.B01 P00.OP3JA.H55	P00.OP3JA.D30 P00.OP3JA.H56	P00.OP3JA.H49 P00.OP3JA.H67

ESTRAN

2-FUNCTION THERMOSTATIC SHOWER SETS



- Trim for thermostatic mixer with 2 outlets
- Showerhead Ø300 mm with shower arm of your choice
- Set with single-jet hand shower and holder of your choice

PRODUCT INFORMATION

- Brass
- 130x335 mm plate
- Brass showerhead with EASY CLEAN nozzles Flowrate: 9.5L/min at 3bar
- 1.5 m Soft Touch silicone hose
- Brass single-jet hand shower with EASY CLEAN nozzles Flowrate: 8L/min at 3bar

Model shown ref. P1C.V2MH5C.H67





TO ORDER WITH ROUGH PART:

P00.THMV2H

TECHNICAL DETAILS SEE P.205



EXTENSION AVAILABLE:

P00.THAL20

TECHNICAL DETAILS SEE P.207

Wall arm L450 mm and showerhead Ø300 mm	Hand shower and hook		P1C.V2MH5C.A02	P1C.V2MH5C.B01	P1C.V2MH5C.D30	P1C.V2MH5C.H49
			P1C.V2MH5C.H50	P1C.V2MH5C.H55	P1C.V2MH5C.H56	P1C.V2MH5C.H67
	Hand shower and shelf 300x100 mm		P1C.V2MH5T.A02	P1C.V2MH5T.B01	P1C.V2MH5T.D30	P1C.V2MH5T.H49
			P1C.V2MH5T.H50	P1C.V2MH5T.H55	P1C.V2MH5T.H56	P1C.V2MH5T.H67
	Hand shower on rail L670 mm, centre distance 600 mm		P1C.V2MH5B.A02	P1C.V2MH5B.B01	P1C.V2MH5B.D30	P1C.V2MH5B.H49
			P1C.V2MH5B.H50	P1C.V2MH5B.H55	P1C.V2MH5B.H56	P1C.V2MH5B.H67
Vertical arm L120 mm and showerhead Ø300 mm	Hand shower and hook		P1C.V2MH6C.A02	P1C.V2MH6C.B01	P1C.V2MH6C.D30	P1C.V2MH6C.H49
			P1C.V2MH6C.H50	P1C.V2MH6C.H55	P1C.V2MH6C.H56	P1C.V2MH6C.H67
	Hand shower and shelf 300x100 mm		P1C.V2MH6T.A02	P1C.V2MH6T.B01	P1C.V2MH6T.D30	P1C.V2MH6T.H49
			P1C.V2MH6T.H50	P1C.V2MH6T.H55	P1C.V2MH6T.H56	P1C.V2MH6T.H67
	Hand shower on rail L670 mm, centre distance 600 mm		P1C.V2MH6B.A02	P1C.V2MH6B.B01	P1C.V2MH6B.D30	P1C.V2MH6B.H49
			P1C.V2MH6B.H50	P1C.V2MH6B.H55	P1C.V2MH6B.H56	P1C.V2MH6B.H67

OPTION

3-JET HAND SHOWER EXTRA-COST

- EASY CLEAN nozzles
- Flowrate: 8L/min at 3bar



P00.OP3JA.A02	P00.OP3JA.B01	P00.OP3JA.D30	P00.OP3JA.H49
P00.OP3JA.H50	P00.OP3JA.H55	P00.OP3JA.H56	P00.OP3JA.H67

ESTRAN

2-FUNCTION THERMOSTATIC SHOWER SETS



- Trim for thermostatic mixer with 2 outlets
- Stainless steel sky shower Ø380 mm
- Set with single-jet hand shower and holder of your choice

PRODUCT INFORMATION

- Brass
- 130x335 mm plate
- Sky shower with EASY CLEAN nozzles Flowrate: 14.5L/min at 3bar
- 1.5 m Soft Touch silicone hose
- Brass single-jet hand shower with EASY CLEAN nozzles Flowrate: 8L/min at 3bar

Model shown ref. P1C.V2MH9C.H67

PLEASE NOTE: FOR PACKS ORDERED IN FINISHES A02 AND B01, THE SKYSHOWER WILL BE DELIVERED IN A POLISHED STAINLESS STEEL FINISH.





TO ORDER WITH ROUGH PART:

P00.THMV2H

TECHNICAL DETAILS SEE P.205



EXTENSION AVAILABLE:

P00.THAL20

TECHNICAL DETAILS SEE P.207

Skyshower Ø380 mm	Hand shower and hook		P1C.V2MH9C.A02	P1C.V2MH9C.B01	P1C.V2MH9C.D30	P1C.V2MH9C.H49
			P1C.V2MH9C.H50	P1C.V2MH9C.H55	P1C.V2MH9C.H56	P1C.V2MH9C.H67
	Hand shower and shelf 300x100 mm		P1C.V2MH9T.A02	P1C.V2MH9T.B01	P1C.V2MH9T.D30	P1C.V2MH9T.H49
			P1C.V2MH9TH50	P1C.V2MH9TH55	P1C.V2MH9T.H56	P1C.V2MH9T.H67
	Hand shower on rail L670 mm, centre distance 600 mm		P1C.V2MH9B.A02	P1C.V2MH9B.B01	P1C.V2MH9B.D30	P1C.V2MH9B.H49
			P1C.V2MH9B.H50	P1C.V2MH9B.H55	P1C.V2MH9B.H56	P1C.V2MH9B.H67

OPTION

3-JET HAND SHOWER EXTRA-COST

- EASY CLEAN nozzles
- Flowrate: 8L/min at 3bar



P00.OP3JA.A02	P00.OP3JA.B01	P00.OP3JA.D30	P00.OP3JA.H49
P00.OP3JA.H50	P00.OP3JA.H55	P00.OP3JA.H56	P00.OP3JA.H67

ESTRAN

2-FUNCTION THERMOSTATIC SHOWER SETS



- Trim for thermostatic mixer with 2 outlets
- Stainless steel sky shower Ø380 mm or showerhead Ø300 mm with shower arm of your choice
- Plate-mounted single-jet hand shower

PRODUCT INFORMATION

- Brass
- 440x130 mm plate
- Brass showerhead Ø200 mm with EASY CLEAN nozzles
  Flowrate: 9.5L/min at 3bar
- Sky shower with EASY CLEAN nozzles
  Flowrate: 14.5L/min at 3bar
- 1.5 m Soft Touch silicone hose
- Brass single-jet hand shower with EASY CLEAN nozzles
  Flowrate: 8L/min at 3bar

Model shown ref. P1C.V2MRX5.H67

PLEASE NOTE: FOR PACKS ORDERED IN FINISHES A02 AND B01, THE SKYSHOWER WILL BE DELIVERED IN A POLISHED STAINLESS STEEL FINISH.





TO ORDER WITH ROUGH PART:

P00.THMV2RX1

TECHNICAL DETAILS SEE P.205



EXTENSION AVAILABLE:

P00.THAL20

TECHNICAL DETAILS SEE P.207

Wall arm
L450 mm and showerhead Ø300 mm



P1C.V2MRX5.A02 P1C.V2MRX5.B01 P1C.V2MRX5.D30 P1C.V2MRX5.H49
P1C.V2MRX5.H50 P1C.V2MRX5.H55 P1C.V2MRX5.H56 P1C.V2MRX5.H67

Vertical arm
L120 mm and showerhead Ø300 mm



P1C.V2MRX6.A02 P1C.V2MRX6.B01 P1C.V2MRX6.D30 P1C.V2MRX6.H49
P1C.V2MRX6.H50 P1C.V2MRX6.H55 P1C.V2MRX6.H56 P1C.V2MRX6.H67

Skyshower
Ø380 mm



P1C.V2MRX9.A02 P1C.V2MRX9.B01 P1C.V2MRX9.D30 P1C.V2MRX9.H49
P1C.V2MRX9.H50 P1C.V2MRX9.H55 P1C.V2MRX9.H56 P1C.V2MRX9.H67

OPTION

3-JET HAND SHOWER EXTRA-COST

- EASY CLEAN nozzles
- Flowrate: 8L/min at 3bar



P00.OP3JA.A02 P00.OP3JA.B01 P00.OP3JA.D30 P00.OP3JA.H49
P00.OP3JA.H50 P00.OP3JA.H55 P00.OP3JA.H56 P00.OP3JA.H67

ESTRAN

2-FUNCTION THERMOSTATIC SHOWER SETS



- Trim for thermostatic mixer with 2 outlets
- Trim only for valves
- Showerhead Ø200 mm with shower arm of your choice
- Set with single-jet hand shower and holder of your choice

PRODUCT INFORMATION

- Brass
- Brass showerhead with EASY CLEAN nozzles Flowrate: 9.5L/min at 3bar
- 1.5 m Soft Touch silicone hose
- Brass single-jet hand shower with EASY CLEAN nozzles Flowrate: 8L/min at 3bar

Model shown ref. P1C.BV2M1C.H67





TO ORDER WITH ROUGH PART:

P00.THM2VA

TECHNICAL DETAILS SEE P.206



EXTENSION AVAILABLE:

P00.THAL20

TECHNICAL DETAILS SEE P.207

Wall arm L450 mm and showerhead Ø200 mm	Hand shower and hook		P1C.BV2M1C.A02	P1C.BV2M1C.B01	P1C.BV2M1C.D30	P1C.BV2M1C.H49
			P1C.BV2M1C.H50	P1C.BV2M1C.H55	P1C.BV2M1C.H56	P1C.BV2M1C.H67
	Hand shower and shelf 300x100 mm		P1C.BV2M1T.A02	P1C.BV2M1T.B01	P1C.BV2M1T.D30	P1C.BV2M1T.H49
			P1C.BV2M1T.H50	P1C.BV2M1T.H55	P1C.BV2M1T.H56	P1C.BV2M1T.H67
	Hand shower on rail L670 mm, centre distance 600 mm		P1C.BV2M1B.A02	P1C.BV2M1B.B01	P1C.BV2M1B.D30	P1C.BV2M1B.H49
			P1C.BV2M1B.H50	P1C.BV2M1B.H55	P1C.BV2M1B.H56	P1C.BV2M1B.H67
Vertical arm L120 mm and showerhead Ø200 mm	Hand shower and hook		P1C.BV2M2C.A02	P1C.BV2M2C.B01	P1C.BV2M2C.D30	P1C.BV2M2C.H49
			P1C.BV2M2C.H50	P1C.BV2M2C.H55	P1C.BV2M2C.H56	P1C.BV2M2C.H67
	Hand shower and shelf 300x100 mm		P1C.BV2M2T.A02	P1C.BV2M2T.B01	P1C.BV2M2T.D30	P1C.BV2M2T.H49
			P1C.BV2M2T.H50	P1C.BV2M2T.H55	P1C.BV2M2T.H56	P1C.BV2M2T.H67
	Hand shower on rail L670 mm, centre distance 600 mm		P1C.BV2M2B.A02	P1C.BV2M2B.B01	P1C.BV2M2B.D30	P1C.BV2M2B.H49
			P1C.BV2M2B.H50	P1C.BV2M2B.H55	P1C.BV2M2B.H56	P1C.BV2M2B.H67

OPTION

3-JET HAND SHOWER EXTRA-COST

- EASY CLEAN nozzles
- Flowrate: 8L/min at 3bar



P00.OP3JA.A02	P00.OP3JA.B01	P00.OP3JA.D30	P00.OP3JA.H49
P00.OP3JA.H50	P00.OP3JA.H55	P00.OP3JA.H56	P00.OP3JA.H67

ESTRAN

2-FUNCTION THERMOSTATIC SHOWER SETS



- Trim for thermostatic mixer with 2 outlets
- Trim only for valves
- Stainless steel sky shower Ø380 mm
- Set with single-jet hand shower and holder of your choice

PRODUCT INFORMATION

- Brass
- Sky shower with EASY CLEAN nozzles Flowrate: 14.5L/min at 3bar
- 1.5 m Soft Touch silicone hose
- Brass single-jet hand shower with EASY CLEAN nozzles Flowrate: 8L/min at 3bar

Model shown ref. P1C.BV2M9C.H67

PLEASE NOTE: FOR PACKS ORDERED IN FINISHES A02 AND B01, THE SKYSHOWER WILL BE DELIVERED IN A POLISHED STAINLESS STEEL FINISH.





TO ORDER WITH ROUGH PART:

P00.THM2VA

TECHNICAL DETAILS SEE P.206



EXTENSION AVAILABLE:

P00.THAL20

TECHNICAL DETAILS SEE P.207

Skyshower Ø380 mm	Hand shower and hook		P1C.BV2M9C.A02	P1C.BV2M9C.B01	P1C.BV2M9C.D30	P1C.BV2M9C.H49
			P1C.BV2M9C.H50	P1C.BV2M9C.H55	P1C.BV2M9C.H56	P1C.BV2M9C.H67
	Hand shower and shelf 300x100 mm		P1C.BV2M9T.A02	P1C.BV2M9T.B01	P1C.BV2M9T.D30	P1C.BV2M9T.H49
			P1C.BV2M9T.H50	P1C.BV2M9T.H55	P1C.BV2M9T.H56	P1C.BV2M9T.H67
	Hand shower on rail L670 mm, centre distance 600 mm		P1C.BV2M9B.A02	P1C.BV2M9B.B01	P1C.BV2M9B.D30	P1C.BV2M9B.H49
			P1C.BV2M9B.H50	P1C.BV2M9B.H55	P1C.BV2M9B.H56	P1C.BV2M9B.H67

OPTION

3-JET HAND SHOWER EXTRA-COST

- EASY CLEAN nozzles
- Flowrate: 8L/min at 3bar



P00.OP3JA.A02	P00.OP3JA.B01	P00.OP3JA.D30	P00.OP3JA.H49
P00.OP3JA.H50	P00.OP3JA.H55	P00.OP3JA.H56	P00.OP3JA.H67

ESTRAN

2-FUNCTION THERMOSTATIC SHOWER SETS



- Trim for thermostatic mixer with 2 outlets and **PUSH** controls
- Showerhead Ø200 mm with shower arm of your choice
- Set with single-jet hand shower and holder of your choice

PRODUCT INFORMATION

- Brass
- 130x295 mm plate
- Brass showerhead with EASY CLEAN nozzles
  Flowrate: 9.5L/min at 3bar
- 1.5 m Soft Touch silicone hose
- Brass single-jet hand shower with EASY CLEAN nozzles
  Flowrate: 8L/min at 3bar

Model shown ref. P1C.P2MH1C.H67





TO ORDER WITH ROUGH PART:

P00.THMP2H

TECHNICAL DETAILS SEE P.206



EXTENSION AVAILABLE:

P00.THAL20

TECHNICAL DETAILS SEE P.207

Wall arm L450 mm and showerhead Ø200 mm	Hand shower and hook		P1C.P2MH1C.A02 P1C.P2MH1C.H50	P1C.P2MH1C.B01 P1C.P2MH1C.H55	P1C.P2MH1C.D30 P1C.P2MH1C.H56	P1C.P2MH1C.H49 P1C.P2MH1C.H67
	Hand shower and shelf 300x100 mm		P1C.P2MH1T.A02 P1C.P2MH1T.H50	P1C.P2MH1T.B01 P1C.P2MH1T.H55	P1C.P2MH1T.D30 P1C.P2MH1T.H56	P1C.P2MH1T.H49 P1C.P2MH1T.H67
	Hand shower on rail L670 mm, centre distance 600 mm		P1C.P2MH1B.A02 P1C.P2MH1B.H50	P1C.P2MH1B.B01 P1C.P2MH1B.H55	P1C.P2MH1B.D30 P1C.P2MH1B.H56	P1C.P2MH1B.H49 P1C.P2MH1B.H67
Vertical arm L120 mm and showerhead Ø200 mm	Hand shower and hook		P1C.P2MH2C.A02 P1C.P2MH2C.H50	P1C.P2MH2C.B01 P1C.P2MH2C.H55	P1C.P2MH2C.D30 P1C.P2MH2C.H56	P1C.P2MH2C.H49 P1C.P2MH2C.H67
	Hand shower and shelf 300x100 mm		P1C.P2MH2T.A02 P1C.P2MH2T.H50	P1C.P2MH2T.B01 P1C.P2MH2T.H55	P1C.P2MH2T.D30 P1C.P2MH2T.H56	P1C.P2MH2T.H49 P1C.P2MH2T.H67
	Hand shower on rail L670 mm, centre distance 600 mm		P1C.P2MH2B.A02 P1C.P2MH2B.H50	P1C.P2MH2B.B01 P1C.P2MH2B.H55	P1C.P2MH2B.D30 P1C.P2MH2B.H56	P1C.P2MH2B.H49 P1C.P2MH2B.H67

OPTION

3-JET HAND SHOWER EXTRA-COST

- EASY CLEAN nozzles
- Flowrate: 8L/min at 3bar



P00.OP3JA.A02 P00.OP3JA.H50	P00.OP3JA.B01 P00.OP3JA.H55	P00.OP3JA.D30 P00.OP3JA.H56	P00.OP3JA.H49 P00.OP3JA.H67

ESTRAN

2-FUNCTION THERMOSTATIC SHOWER SETS



- Trim for thermostatic mixer with 2 outlets and **PUSH** controls
- Stainless steel sky shower Ø380 mm
- Set with single-jet hand shower and holder of your choice

PRODUCT INFORMATION

- Brass
- 130x295 mm plate
- Sky shower with EASY CLEAN nozzles Flowrate: 14.5L/min at 3bar
- 1.5 m Soft Touch silicone hose
- Brass single-jet hand shower with EASY CLEAN nozzles Flowrate: 8L/min at 3bar

Model shown ref. P1C.P2MH9C.H67

PLEASE NOTE: FOR PACKS ORDERED IN FINISHES A02 AND B01, THE SKYSHOWER WILL BE DELIVERED IN A POLISHED STAINLESS STEEL FINISH.





TO ORDER WITH ROUGH PART:

P00.THMP2H

TECHNICAL DETAILS SEE P.206



EXTENSION AVAILABLE:

P00.THAL20

TECHNICAL DETAILS SEE P.207

Skyshower Ø380 mm	Hand shower and hook		P1C.P2MH9C.A02	P1C.P2MH9C.B01	P1C.P2MH9C.D30	P1C.P2MH9C.H49
			P1C.P2MH9C.H50	P1C.P2MH9C.H55	P1C.P2MH9C.H56	P1C.P2MH9C.H67
	Hand shower and shelf 300x100 mm		P1C.P2MH9T.A02	P1C.P2MH9T.B01	P1C.P2MH9T.D30	P1C.P2MH9T.H49
			P1C.P2MH9T.H50	P1C.P2MH9T.H55	P1C.P2MH9T.H56	P1C.P2MH9T.H67
	Hand shower on rail L670 mm, centre distance 600 mm		P1C.P2MH9B.A02	P1C.P2MH9B.B01	P1C.P2MH9B.D30	P1C.P2MH9B.H49
			P1C.P2MH9B.H50	P1C.P2MH9B.H55	P1C.P2MH9B.H56	P1C.P2MH9B.H67

OPTION

3-JET HAND SHOWER EXTRA-COST

- EASY CLEAN nozzles
- Flowrate: 8L/min at 3bar



P00.OP3JA.A02	P00.OP3JA.B01	P00.OP3JA.D30	P00.OP3JA.H49
P00.OP3JA.H50	P00.OP3JA.H55	P00.OP3JA.H56	P00.OP3JA.H67

ESTRAN

3-FUNCTION THERMOSTATIC SHOWER SETS







- Trim for thermostatic mixer with 3 outlets
- Stainless steel wall-mounted shower water blade
- Showerhead Ø300 mm with shower arm of your choice
- Set with single-jet hand shower and holder of your choice

PRODUCT INFORMATION

- Brass
- 130x445 mm plate
- Brass showerhead with EASY CLEAN nozzles Flowrate: 9.5L/min at 3bar
- Wall-mounted shower water blade flowrate: 17L/min at 3bar
- 1.5 m Soft Touch silicone hose
- Brass single-jet hand shower with EASY CLEAN nozzles Flowrate: 8L/min at 3bar

Model shown ref. P1C.V3MH5CL.H67

PLEASE NOTE: FOR PACKS ORDERED IN FINISHES A02 AND B01, THE WATER BLADE WILL BE DELIVERED IN A POLISHED STAINLESS STEEL FINISH.



TO ORDER WITH ROUGH PART:

P00.THMV3H

TECHNICAL DETAILS SEE P.203



EXTENSION AVAILABLE:

P00.THAL20

TECHNICAL DETAILS SEE P.207

Wall arm L450 mm and showerhead Ø300 mm	Hand shower and hook		P1C.V3MH5CL.A02	P1C.V3MH5CL.B01	P1C.V3MH5CL.D30	P1C.V3MH5CL.H49	
			P1C.V3MH5CL.H50	P1C.V3MH5CL.H55	P1C.V3MH5CL.H56	P1C.V3MH5CL.H67	
	Hand shower and shelf 300x100 mm		P1C.V3MH5TL.A02	P1C.V3MH5TL.B01	P1C.V3MH5TL.D30	P1C.V3MH5TL.H49	
			P1C.V3MH5TL.H50	P1C.V3MH5TL.H55	P1C.V3MH5TL.H56	P1C.V3MH5TL.H67	
	Hand shower on rail L670 mm, centre distance 600 mm		P1C.V3MH5BL.A02	P1C.V3MH5BL.B01	P1C.V3MH5BL.D30	P1C.V3MH5BL.H49	
			P1C.V3MH5BL.H50	P1C.V3MH5BL.H55	P1C.V3MH5BL.H56	P1C.V3MH5BL.H67	
Vertical arm L120 mm and showerhead Ø300 mm	Hand shower and hook		P1C.V3MH6CL.A02	P1C.V3MH6CL.B01	P1C.V3MH6CL.D30	P1C.V3MH6CL.H49	
			P1C.V3MH6CL.H50	P1C.V3MH6CL.H55	P1C.V3MH6CL.H56	P1C.V3MH6CL.H67	
	Hand shower and shelf 300x100 mm		P1C.V3MH6TL.A02	P1C.V3MH6TL.B01	P1C.V3MH6TL.D30	P1C.V3MH6TL.H49	
			P1C.V3MH6TL.H50	P1C.V3MH6TL.H55	P1C.V3MH6TL.H56	P1C.V3MH6TL.H67	
	Hand shower on rail L670 mm, centre distance 600 mm		P1C.V3MH6BL.A02	P1C.V3MH6BL.B01	P1C.V3MH6BL.D30	P1C.V3MH6BL.H49	
			P1C.V3MH6BL.H50	P1C.V3MH6BL.H55	P1C.V3MH6BL.H56	P1C.V3MH6BL.H67	

OPTION

3-JET HAND SHOWER EXTRA-COST

- EASY CLEAN nozzles
- Flowrate: 8L/min at 3bar



P00.OP3JA.A02	P00.OP3JA.B01	P00.OP3JA.D30	P00.OP3JA.H49
P00.OP3JA.H50	P00.OP3JA.H55	P00.OP3JA.H56	P00.OP3JA.H67

3-FUNCTION THERMOSTATIC SHOWER SETS







- Trim for thermostatic mixer with 3 outlets
- Stainless steel sky shower Ø380 mm
- Stainless steel wall-mounted shower water blade or wall-mounted body jets
- Set with single-jet hand shower and holder of your choice

PRODUCT INFORMATION

- Brass
- 130x445 mm plate
- Sky shower with EASY CLEAN nozzles Flowrate: 14.5L/min at 3bar
- Wall-mounted shower water blade flowrate: 17L/min at 3bar
- Wall-mounted body jets with EASY CLEAN nozzles Flowrate: 4L/min at 3bar
- 1.5 m Soft Touch silicone hose
- Brass single-jet hand shower with EASY CLEAN nozzles Flowrate: 8L/min at 3bar

Model shown ref. P1C.V3MH9CL.H67

PLEASE NOTE: FOR PACKS ORDERED IN FINISHES A02 AND B01, THE SKYSHOWER AND WATER BLADE WILL BE DELIVERED IN A POLISHED STAINLESS STEEL FINISH.



TO ORDER WITH ROUGH PART:

P00.THMV3H

TECHNICAL DETAILS SEE P.203



EXTENSION AVAILABLE:

P00.THAL20

TECHNICAL DETAILS SEE P.207



Stainless steel wall-mounted water blade, 300x145 mm

Hand shower and hook		P1C.V3MH9CL.A02	P1C.V3MH9CL.B01	P1C.V3MH9CL.D30	P1C.V3MH9CL.H49
		P1C.V3MH9CL.H50	P1C.V3MH9CL.H55	P1C.V3MH9CL.H56	P1C.V3MH9CL.H67
Hand shower and shelf 300x100 mm		P1C.V3MH9TL.A02	P1C.V3MH9TL.B01	P1C.V3MH9TL.D30	P1C.V3MH9TL.H49
		P1C.V3MH9TL.H50	P1C.V3MH9TL.H55	P1C.V3MH9TL.H56	P1C.V3MH9TL.H67
Hand shower on rail L670 mm, centre distance 600 mm		P1C.V3MH9BL.A02	P1C.V3MH9BL.B01	P1C.V3MH9BL.D30	P1C.V3MH9BL.H49
		P1C.V3MH9BL.H50	P1C.V3MH9BL.H55	P1C.V3MH9BL.H56	P1C.V3MH9BL.H67



6 round built-in side jets Ø90 mm

Hand shower and hook		P1C.V3MH9TJ.A02	P1C.V3MH9TJ.B01	P1C.V3MH9TJ.D30	P1C.V3MH9TJ.H49
		P1C.V3MH9TJ.H50	P1C.V3MH9TJ.H55	P1C.V3MH9TJ.H56	P1C.V3MH9TJ.H67
Hand shower and shelf 300x100 mm		P1C.V3MH9BJ.A02	P1C.V3MH9BJ.B01	P1C.V3MH9BJ.D30	P1C.V3MH9BJ.H49
		P1C.V3MH9BJ.H50	P1C.V3MH9BJ.H55	P1C.V3MH9BJ.H56	P1C.V3MH9BJ.H67
Hand shower on rail L670 mm, centre distance 600 mm					

OPTION

3-JET HAND SHOWER EXTRA-COST

- EASY CLEAN nozzles
- Flowrate: 8L/min at 3bar



P00.OP3JA.A02	P00.OP3JA.B01	P00.OP3JA.D30	P00.OP3JA.H49
P00.OP3JA.H50	P00.OP3JA.H55	P00.OP3JA.H56	P00.OP3JA.H67

ESTRAN

3-FUNCTION THERMOSTATIC SHOWER SETS



- Trim for thermostatic mixer with 3 outlets
- Stainless steel sky shower 380x380 mm with central jet
- Set with single-jet hand shower and holder of your choice

PRODUCT INFORMATION

- Brass
- 130x445 mm plate
- Sky shower with EASY CLEAN nozzles
  Sky shower flowrate: 14.5L/min at 3bar
  Central jet flowrate: 20L/min at 3bar
- 1.5 m Soft Touch silicone hose
- Brass single-jet hand shower with EASY CLEAN nozzles
  Flowrate: 8L/min at 3bar

Model shown ref. P1C.V3MH11C.H67

PLEASE NOTE: FOR PACKS ORDERED IN FINISHES A02 AND B01, THE SKYSHOWER WILL BE DELIVERED IN A POLISHED STAINLESS STEEL FINISH.





TO ORDER WITH ROUGH PART:

P00.THMV3H

TECHNICAL DETAILS SEE P.203



EXTENSION AVAILABLE:

P00.THAL20

TECHNICAL DETAILS SEE P.207

Skyshower 380x380 mm with central jet	Hand shower and hook		P1C.V3MH11C.A02 P1C.V3MH11C.H50	P1C.V3MH11C.B01 P1C.V3MH11C.H55	P1C.V3MH11C.D30 P1C.V3MH11C.H56	P1C.V3MH11C.H49 P1C.V3MH11C.H67
	Hand shower and shelf 300x100 mm		P1C.V3MH11T.A02 P1C.V3MH11T.H50	P1C.V3MH11T.B01 P1C.V3MH11T.H55	P1C.V3MH11T.D30 P1C.V3MH11T.H56	P1C.V3MH11T.H49 P1C.V3MH11T.H67
	Hand shower on rail L670 mm, centre distance 600 mm		P1C.V3MH11B.A02 P1C.V3MH11B.H50	P1C.V3MH11B.B01 P1C.V3MH11B.H55	P1C.V3MH11B.D30 P1C.V3MH11B.H56	P1C.V3MH11B.H49 P1C.V3MH11B.H67

OPTION

3-JET HAND SHOWER EXTRA-COST

- EASY CLEAN nozzles
- Flowrate: 8L/min at 3bar



P00.OP3JA.A02 P00.OP3JA.H50	P00.OP3JA.B01 P00.OP3JA.H55	P00.OP3JA.D30 P00.OP3JA.H56	P00.OP3JA.H49 P00.OP3JA.H67

3-FUNCTION THERMOSTATIC SHOWER SETS





- Trim for thermostatic mixer with 3 outlets and **PUSH** controls
- Stainless steel sky shower Ø380 mm with stainless steel wall-mounted shower water blade or wall-mounted body jets, or only stainless steel sky shower 380x380 mm with central jet
- Plate-mounted single-jet hand shower

PRODUCT INFORMATION

- Brass
- 470x130 mm plate
- Sky shower with EASY CLEAN nozzles Flowrate: 14.5L/min at 3bar
- Wall-mounted shower water blade flowrate: 17L/min at 3bar
- Wall-mounted body jets with EASY CLEAN nozzles Flowrate: 4L/min at 3bar
- Sky shower with EASY CLEAN nozzles Sky shower flowrate: 14.5L/min at 3bar Central jet flowrate: 20L/min at 3bar
- 1.5 m Soft Touch silicone hose
- Brass single-jet hand shower with EASY CLEAN nozzles Flowrate: 8L/min at 3bar

Model shown ref. P1C.P3MRX9L.H67

PLEASE NOTE: FOR PACKS ORDERED IN FINISHES A02 AND B01, THE SKYSHOWERS AND WATER BLADES WILL BE DELIVERED IN A POLISHED STAINLESS STEEL FINISH.





TO ORDER WITH ROUGH PART:

P00.THMP3RX1

TECHNICAL DETAILS SEE P.204



EXTENSION AVAILABLE:

P00.THAL20

TECHNICAL DETAILS SEE P.207



Skyshower Ø380 mm

Stainless steel wall-mounted water blade, 300x145 mm



P1C.P3MRX9L.A02 P1C.P3MRX9L.B01 P1C.P3MRX9L.D30 P1C.P3MRX9L.H49
P1C.P3MRX9L.H50 P1C.P3MRX9L.H55 P1C.P3MRX9L.H56 P1C.P3MRX9L.H67

6 round built-in side jets Ø90 mm



P1C.P3MRX9J.A02 P1C.P3MRX9J.B01 P1C.P3MRX9J.D30 P1C.P3MRX9J.H49
P1C.P3MRX9J.H50 P1C.P3MRX9J.H55 P1C.P3MRX9J.H56 P1C.P3MRX9J.H67



Skyshower 380x380 mm with central jet

P1C.P3MRX11.A02 P1C.P3MRX11.B01 P1C.P3MRX11.D30 P1C.P3MRX11.H49
P1C.P3MRX11.H50 P1C.P3MRX11.H55 P1C.P3MRX11.H56 P1C.P3MRX11.H67

OPTION

3-JET HAND SHOWER EXTRA-COST

- EASY CLEAN nozzles
- Flowrate: 8L/min at 3bar



P00.OP3JA.A02 P00.OP3JA.B01 P00.OP3JA.D30 P00.OP3JA.H49
P00.OP3JA.H50 P00.OP3JA.H55 P00.OP3JA.H56 P00.OP3JA.H67



3-FUNCTION THERMOSTATIC SHOWER SETS







- Trim for thermostatic mixer with 3 outlets
- Stainless steel sky shower Ø380 mm with stainless steel wall-mounted shower water blade or wall-mounted body jets, or only stainless steel sky shower 380x380 mm with central jet
- Plate-mounted single-jet hand shower

PRODUCT INFORMATION

- Brass
- 550x130 mm plate
- Sky shower with EASY CLEAN nozzles
  Flowrate: 14.5L/min at 3bar
- Wall-mounted shower water blade flowrate: 17L/min at 3bar
- Wall-mounted body jets with EASY CLEAN nozzles
  Flowrate: 4L/min at 3bar
- Sky shower with EASY CLEAN nozzles
  Sky shower flowrate: 14.5L/min at 3bar
  Central jet flowrate: 20L/min at 3bar
- 1.5 m Soft Touch silicone hose
- Brass single-jet hand shower with EASY CLEAN nozzles
  Flowrate: 8L/min at 3bar

Model shown ref. P1C.V3MRX9L.H67

PLEASE NOTE: FOR PACKS ORDERED IN FINISHES A02 AND B01, THE SKYSHOWERS AND WATER BLADES WILL BE DELIVERED IN A POLISHED STAINLESS STEEL FINISH.



TO ORDER WITH ROUGH PART:

P00.THMV3RX1

TECHNICAL DETAILS SEE P.207



EXTENSION AVAILABLE:

P00.THAL20

TECHNICAL DETAILS SEE P.207



Skyshower Ø380 mm

Stainless steel wall-mounted water blade, 300x145 mm



P1C.V3MRX9L.A02 P1C.V3MRX9L.B01 P1C.V3MRX9L.D30 P1C.V3MRX9L.H49
P1C.V3MRX9L.H50 P1C.V3MRX9L.H55 P1C.V3MRX9L.H56 P1C.V3MRX9L.H67

6 round built-in side jets Ø90 mm



P1C.V3MRX9J.A02 P1C.V3MRX9J.B01 P1C.V3MRX9J.D30 P1C.V3MRX9J.H49
P1C.V3MRX9J.H50 P1C.V3MRX9J.H55 P1C.V3MRX9J.H56 P1C.V3MRX9J.H67



Skyshower 380x380 mm with central jet

P1C.V3MRX11.A02 P1C.V3MRX11.B01 P1C.V3MRX11.D30 P1C.V3MRX11.H49
P1C.V3MRX11.H50 P1C.V3MRX11.H55 P1C.V3MRX11.H56 P1C.V3MRX11.H67

OPTION

3-JET HAND SHOWER EXTRA-COST

- EASY CLEAN nozzles
- Flowrate: 8L/min at 3bar



P00.OP3JA.A02 P00.OP3JA.B01 P00.OP3JA.D30 P00.OP3JA.H49
P00.OP3JA.H50 P00.OP3JA.H55 P00.OP3JA.H56 P00.OP3JA.H67

ESTRAN

SHOWER DRAINS

Drains for walk-in showers and masonry showers, bottom outlet



FULL COVER GRID



TILE-READY COVER GRID



DECOR COVER GRID

☐ 100 mm

INSTRUCTION MANUAL

P00.763B100C50
- Flowrate: 30L/min

P00.763B100C50.A08
P00.763B100C50.A09
P00.763B100C50.D30
P00.763B100C51.H49
P00.763B100C50.H50
P00.763B100C50.H55
P00.763B100C50.H56
P00.763B100C50.H67

☐ 125 mm

INSTRUCTION MANUAL

P00.763B125A50
- Flowrate: 20L/min

P00.763B125A50.A08
P00.763B125A50.A09
P00.763B125A50.D30
P00.763B125A50.H49
P00.763B125A50.H50
P00.763B125A50.H55
P00.763B125A50.H56
P00.763B125A50.H67

P00.763B125B50
- Flowrate: 20L/min

P00.763B125B50.A08
P00.763B125B50.A09
P00.763B125B50.D30
P00.763B125B50.H49
P00.763B125B50.H50
P00.763B125B50.H55
P00.763B125B50.H56
P00.763B125B50.H67

P00.763B125C50
- Flowrate: 30L/min

P00.763B125C50.A08
P00.763B125C50.A09
P00.763B125C50.D30
P00.763B125C50.H49
P00.763B125C50.H50
P00.763B125C50.H55
P00.763B125C50.H56
P00.763B125C50.H67

☐ 150 mm

INSTRUCTION MANUAL

P00.763B150A50
- Flowrate: 30L/min

P00.763B150A50.A08
P00.763B150A50.A09
P00.763B150A50.D30
P00.763B150A50.H49
P00.763B150A50.H50
P00.763B150A50.H55
P00.763B150A50.H56
P00.763B150A50.H67

P00.763B150B50
- Flowrate: 30L/min

P00.763B150B50.A08
P00.763B150B50.A09
P00.763B150B50.D30
P00.763B150B50.H49
P00.763B150B50.H50
P00.763B150B50.H55
P00.763B150B50.H56
P00.763B150B50.H67

P00.763B150C50
- Flowrate: 30L/min

P00.763B150C50.A08
P00.763B150C50.A09
P00.763B150C50.D30
P00.763B150C50.H49
P00.763B150C50.H50
P00.763B150C50.H55
P00.763B150C50.H56
P00.763B150C50.H67

ESTRAN

SHOWER DRAINS

Drains for walk-in showers and masonry showers, side outlet



FULL COVER GRID



TILE-READY COVER GRID



DECOR COVER GRID

☐ 100 mm

INSTRUCTION MANUAL

P00.764S100C50
- Flowrate: 35L/min

P00.764S100C50.A08
P00.764S100C50.A09
P00.764S100C50.D30
P00.764S100C50.H49
P00.764S100C50.H50
P00.764S100C50.H55
P00.764S100C50.H56
P00.764S100C50.H67

☐ 125 mm

INSTRUCTION MANUAL

P00.764S125A50
- Flowrate: 30L/min

P00.764S125A50.A08
P00.764S125A50.A09
P00.764S125A50.D30
P00.764S125A50.H49
P00.764S125A50.H50
P00.764S125A50.H55
P00.764S125A50.H56
P00.764S125A50.H67

P00.764S125B50
- Flowrate: 30L/min

P00.764S125B50.A08
P00.764S125B50.A09
P00.764S125B50.D30
P00.764S125B50.H49
P00.764S125B50.H50
P00.764S125B50.H55
P00.764S125B50.H56
P00.764S125B50.H67

P00.764S125C50
- Flowrate: 35L/min

P00.764S125C50.A08
P00.764S125C50.A09
P00.764S125C50.D30
P00.764S125C50.H49
P00.764S125C50.H50
P00.764S125C50.H55
P00.764S125C50.H56
P00.764S125C50.H67

☐ 150 mm

INSTRUCTION MANUAL

P00.764S150A50
- Flowrate: 40L/min

P00.764S150A50.A08
P00.764S150A50.A09
P00.764S150A50.D30
P00.764S150A50.H49
P00.764S150A50.H50
P00.764S150A50.H55
P00.764S150A50.H56
P00.764S150A50.H67

P00.764S150B50
- Flowrate: 40L/min

P00.764S150B50.A08
P00.764S150B50.A09
P00.764S150B50.D30
P00.764S150B50.H49
P00.764S150B50.H50
P00.764S150B50.H55
P00.764S150B50.H56
P00.764S150B50.H67

P00.764S150C50
- Flowrate: 40L/min

P00.764S150C50.A08
P00.764S150C50.A09
P00.764S150C50.D30
P00.764S150C50.H49
P00.764S150C50.H50
P00.764S150C50.H55
P00.764S150C50.H56
P00.764S150C50.H67



ESTRAN

SHOWER DRAINS

Linear drains for walk-in showers and masonry showers, side outlet

- **Flowrate: 45L/min**





	FULL COVER GRID	TILE-READY COVER GRID
700 mm	P00.7625700A50.A08 P00.7625700A50.A09 P00.7625700A50.D30 P00.7625700A50.H49 P00.7625700A50.H50 P00.7625700A50.H55 P00.7625700A50.H56 P00.7625700A50.H67	P00.7625700B50.A00
800 mm	P00.7625800A50.A08 P00.7625800A50.A09 P00.7625800A50.D30 P00.7625800A50.H49 P00.7625800A50.H50 P00.7625800A50.H55 P00.7625800A50.H56 P00.7625800A50.H67	P00.7625800B50.A00
900 mm	P00.7625900A50.A08 P00.7625900A50.A09 P00.7625900A50.D30 P00.7625900A50.H49 P00.7625900A50.H50 P00.7625900A50.H55 P00.7625900A50.H56 P00.7625900A50.H67	P00.7625900B50.A00

INSTRUCTION MANUAL



BIDET & TOILET



P1C.6504

Single lever bidet mixer with waste

- **Brass**
- **Supplied with 1¼″ click waste**
- **Cold start and EASY FIX system**
- **Overall height: 183 mm - Maximum spout projection: 124 mm**
- **Flowrate: 8.4L/min at 3bar**

P1C.6504.A02 P1C.6504.B01 P1C.6504.D30 P1C.6504.H49
P1C.6504.H50 P1C.6504.H55 P1C.6504.H56 P1C.6504.H67



P1C.5840/11

WC douche set including: trigger spray, hose and wall outlet with stop lever

- **Brass**
- **1.25 m Soft Touch silicone hose**
- **Flowrate: 8L/min at 3bar**

P1C.5840/11.A02 P1C.5840/11.B01 P1C.5840/11.D30 P1C.5840/11.H49
P1C.5840/11.H50 P1C.5840/11.H55 P1C.5840/11.H56 P1C.5840/11.H67



P1C.5840SPB

Trim for WC douche including: trigger spray, wall mounted single lever mixer, hose, wall outlet with integrated elbow with safety stopper

- **Brass**
- **Ceramic cartridge**
- **1.25 m Soft Touch silicone hose**
- **Flowrate: 8L/min at 3bar**



TO ORDER WITH ROUGH PART:

P00.6541SPA

TECHNICAL DETAILS SEE P.200

P1C.5840SPB.A02 P1C.5840SPB.B01 P1C.5840SPB.D30 P1C.5840SPB.H49
P1C.5840SPB.H50 P1C.5840SPB.H55 P1C.5840SPB.H56 P1C.5840SPB.H67

ESTRAN

ACCESSORIES



P1C.538A

Wall mounted WC paper holder without cover

- **Width: 133 mm**

P1C.538A.A02 P1C.538A.B01 P1C.538A.D30 P1C.538A.H49
P1C.538A.H50 P1C.538A.H55 P1C.538A.H56 P1C.538A.H67



P1C.538AC

Wall mounted WC paper holder with cover

- **Width: 125 mm**

P1C.538AC.A02 P1C.538AC.B01 P1C.538AC.D30 P1C.538AC.H49
P1C.538AC.H50 P1C.538AC.H55 P1C.538AC.H56 P1C.538AC.H67



P1C.542

Wall mounted WC reserve paper holder

- **Height: 146 mm**

P1C.542.A02 P1C.542.B01 P1C.542.D30 P1C.542.H49
P1C.542.H50 P1C.542.H55 P1C.542.H56 P1C.542.H67

ACCESSORIES



P1C.4720CJ

Stainless steel wall mounted WC brush with cover and holder

- **Height: 408 mm**
- **WC brush holder Ø80 mm**

P1C.4720CJ.A08 P1C.4720CJ.D30 P1C.4720CJ.H49
P1C.4720CJ.H50 P1C.4720CJ.H55 P1C.4720CJ.H56 P1C.4720CJ.H67



P1C.4722

Wall mounted WC brush and holder, glass

- **Height: 359 mm**

P1C.4722.A02 P1C.4722.B01 P1C.4722.D30 P1C.4722.H49
P1C.4722.H50 P1C.4722.H55 P1C.4722.H56 P1C.4722.H67



P1C.613M

Wall mounted liquid soap dispenser, with lever control

- **Height: 148 mm**

P1C.613M.A02 P1C.613M.B01 P1C.613M.D30 P1C.613M.H49
P1C.613M.H50 P1C.613M.H55 P1C.613M.H56 P1C.613M.H67

ESTRAN

ACCESSORIES



P1C.613
Wall mounted liquid soap dispenser

- **Height: 156 mm**

P1C.613.A02 P1C.613.B01 P1C.613.D30 P1C.613.H49
P1C.613.H50 P1C.613.H55 P1C.613.H56 P1C.613.H67



P1C.500
Wall mounted glass soap dish

- **Ø110 mm soap dish**

P1C.500.A02 P1C.500.B01 P1C.500.D30 P1C.500.H49
P1C.500.H50 P1C.500.H55 P1C.500.H56 P1C.500.H67



P1C.536
Wall mounted glass tumbler and holder

- **Height: 108 mm**

P1C.536.A02 P1C.536.B01 P1C.536.D30 P1C.536.H49
P1C.536.H50 P1C.536.H55 P1C.536.H56 P1C.536.H67



P1C.517
Single robe hook

- **Length: 44 mm**

P1C.517.A02 P1C.517.B01 P1C.517.D30 P1C.517.H49
P1C.517.H50 P1C.517.H55 P1C.517.H56 P1C.517.H67

ACCESSORIES



P1C.504P
Single towel ring

- Ø170 mm

P1C.504P.A02 P1C.504P.B01 P1C.504P.D30 P1C.504P.H49
P1C.504P.H50 P1C.504P.H55 P1C.504P.H56 P1C.504P.H67



P1C.521/60
Single towel rail, fixed rail, large model

- 600 mm centres

P1C.521/60.A02 P1C.521/60.B01 P1C.521/60.D30 P1C.521/60.H49
P1C.521/60.H50 P1C.521/60.H55 P1C.521/60.H56 P1C.521/60.H67



P1C.521/45
Single towel rail, fixed rail, medium model

- 450 mm centres

P1C.521/45.A02 P1C.521/45.B01 P1C.521/45.D30 P1C.521/45.H49
P1C.521/45.H50 P1C.521/45.H55 P1C.521/45.H56 P1C.521/45.H67



P1C.564
Glass shelf with supports, large model

- SECURIT glass, 10 mm thick
- Length: 600 mm
- Depth: 139 mm

P1C.564.A02 P1C.564.B01 P1C.564.D30 P1C.564.H49
P1C.564.H50 P1C.564.H55 P1C.564.H56 P1C.564.H67



P1C.564/45
Glass shelf with supports, medium model

- SECURIT glass, 10 mm thick
- Length: 450 mm
- Depth: 119 mm

P1C.564/45.A02 P1C.564/45.B01 P1C.564/45.D30 P1C.564/45.H49
P1C.564/45.H50 P1C.564/45.H55 P1C.564/45.H56 P1C.564/45.H67





OBIONE

A salt-tolerant plant found along the shoreline, Obione embodies strength and purity. Its geometric, confident silhouette expresses a structured design language, conceived for modernity and enduring appeal.

Collection presented in MATT BRASS PVD finish (H50)

OBIONE





BASIN



P1B.151

Rim mounted 3-hole basin mixer with waste

- Low-lead brass
- Supplied with 1¼" click waste
- Overall height: 247 mm - Maximum spout projection: 161 mm
- Flowrate: 6L/min at 3bar

P1B.151.A02 P1B.151.B01 P1B.151.D30 P1B.151.H49
P1B.151.H50 P1B.151.H55 P1B.151.H56 P1B.151.H67



P1B.6500

Single lever basin mixer with waste

- Low-lead brass
- Supplied with 1¼" click waste
- COLD START ceramic cartridge with temperature stop and EASY FIX system
- Overall height: 187 mm - Maximum spout projection: 130 mm
- Flowrate: 6L/min at 3bar

P1B.6500.A02 P1B.6500.B01 P1B.6500.D30 P1B.6500.H49
P1B.6500.H50 P1B.6500.H55 P1B.6500.H56 P1B.6500.H67

P1B.6500SV

Single lever basin mixer without waste

- FEATURES: SEE ABOVE

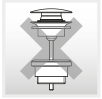

P1B.6500SV.A02 P1B.6500SV.B01 P1B.6500SV.D30 P1B.6500SV.H49
P1B.6500SV.H50 P1B.6500SV.H55 P1B.6500SV.H56 P1B.6500SV.H67



P1B.6500D

Single lever basin mixer with waste, medium size

- Low-lead brass
- Supplied with 1¼" click waste
- COLD START ceramic cartridge with temperature stop and EASY FIX system
- Overall height: 277 mm - Maximum spout projection: 150 mm
- Flowrate: 6L/min at 3bar

P1B.6500D.A02 P1B.6500D.B01 P1B.6500D.D30 P1B.6500D.H49
P1B.6500D.H50 P1B.6500D.H55 P1B.6500D.H56 P1B.6500D.H67

P1B.6500DSV

Single lever basin mixer without waste, medium size

- FEATURES: SEE ABOVE



P1B.6500DSV.A02 P1B.6500DSV.B01 P1B.6500DSV.D30 P1B.6500DSV.H49
P1B.6500DSV.H50 P1B.6500DSV.H55 P1B.6500DSV.H56 P1B.6500DSV.H67

OBIONE

BASIN



P1B.6500H

Single lever basin mixer with waste, high model

- **Low-lead brass**
- **Supplied with 1¼" click waste**
- **COLD START ceramic cartridge with temperature stop and EASY FIX system**
- **Overall height: 335 mm - Maximum spout projection: 150 mm**
- **Flowrate: 6L/min at 3bar**

P1B.6500H.A02 P1B.6500H.B01 P1B.6500H.D30 P1B.6500H.H49
P1B.6500H.H50 P1B.6500H.H55 P1B.6500H.H56 P1B.6500H.H67

P1B.6500HSV

Single lever basin mixer without waste, high model

- **FEATURES: SEE ABOVE**

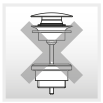

P1B.6500HSV.A02 P1B.6500HSV.B01 P1B.6500HSV.D30 P1B.6500HSV.H49
P1B.6500HSV.H50 P1B.6500HSV.H55 P1B.6500HSV.H56 P1B.6500HSV.H67



P1B.40GB

Trim only for wall mounted 3-hole basin mixer, without waste

- **Low-lead brass**
- **Maximum spout projection: 137 mm**
- **Flowrate: 15L/min at 3bar**





TO ORDER WITH ROUGH PART:

P00.40AC

TECHNICAL DETAILS SEE P.200

P1B.40GB.A02 P1B.40GB.B01 P1B.40GB.D30 P1B.40GB.H49
P1B.40GB.H50 P1B.40GB.H55 P1B.40GB.H56 P1B.40GB.H67



P1B.40SGB

Trim only for wall mounted 3-hole basin mixer, long spout, without waste

- **Low-lead brass**
- **Maximum spout projection: 227 mm**
- **Flowrate: 15L/min at 3bar**





TO ORDER WITH ROUGH PART:

P00.40AC

TECHNICAL DETAILS SEE P.200

P1B.40SGB.A02 P1B.40SGB.B01 P1B.40SGB.D30 P1B.40SGB.H49
P1B.40SGB.H50 P1B.40SGB.H55 P1B.40SGB.H56 P1B.40SGB.H67

BASIN



P1B.6541SPB

Trim for wall-mounted built-in basin mixer with spout, without waste

- Low-lead brass
- Ceramic cartridge with temperature stop
- Maximum spout projection: 137 mm
- Flowrate: 15L/min at 3bar

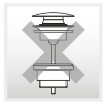



TO ORDER WITH ROUGH PART:

P00.6541SPA

TECHNICAL DETAILS SEE P.200

P1B.6541SPB.A02 P1B.6541SPB.B01 P1B.6541SPB.D30 P1B.6541SPB.H49
P1B.6541SPB.H50 P1B.6541SPB.H55 P1B.6541SPB.H56 P1B.6541SPB.H67



P1B.6541SPBL

Trim for wall-mounted built-in basin mixer with long spout, without waste

- Low-lead brass
- Ceramic cartridge with temperature stop
- Maximum spout projection: 227 mm
- Flowrate: 15L/min at 3bar





TO ORDER WITH ROUGH PART:

P00.6541SPA

TECHNICAL DETAILS SEE P.200

P1B.6541SPBL.A02 P1B.6541SPBL.B01 P1B.6541SPBL.D30 P1B.6541SPBL.H49
P1B.6541SPBL.H50 P1B.6541SPBL.H55 P1B.6541SPBL.H56 P1B.6541SPBL.H67



BASIN WASTE



P00.316KB

Click waste, supplied with locking kit for free-flowing basin

- Brass
- 1¼" connection

P00.316KB.A02 P00.316KB.B01 P00.316KB.D30 P00.316KB.H49
P00.316KB.H50 P00.316KB.H55 P00.316KB.H56 P00.316KB.H67



P00.309SP

Bottle trap only for waste

- Brass
- Height: min. 80 mm - max. 176 mm
- Length 326 mm
- Tube Ø32 mm

P00.309SP.A02 P00.309SP.B01 P00.309SP.D30 P00.309SP.H49
P00.309SP.H50 P00.309SP.H55 P00.309SP.H56 P00.309SP.H57



P00.308TP

Adjustable bottle trap

- Brass
- Height: min. 85 mm - max. 130 mm
- Length 326 mm
- Tube Ø32 mm

P00.308TP.A02 P00.308TP.B01 P00.308TP.D30 P00.308TP.H49
P00.308TP.H50 P00.308TP.H55 P00.308TP.H56 P00.308TP.H57



P00.315LP

Adjustable "P" trap

- Brass
- Height: min. 140 mm - max. 196 mm
- Length 267 mm
- Tube Ø32 mm

P00.315LP.A02 P00.315LP.B01 P00.315LP.D30 P00.315LP.H49
P00.315LP.H50 P00.315LP.H55 P00.315LP.H56 P00.315LP.H57

OBIONE

BATH



P1B.1132SG

Bath mixer with hand shower supplied by progressive cartridge mixer

- Brass
- Spout: Overall height 250 mm
  Maximum spout projection: 220 mm
  Flowrate: 21L/min at 3bar
- 1.5 m Soft Touch silicone hose
- Brass single-jet hand shower
  with EASY CLEAN nozzles
  Flowrate: 8L/min at 3bar
- Manual mixing valve

P1B.1132SG.A02 P1B.1132SG.B01 P1B.1132SG.D30 P1B.1132SG.H49
P1B.1132SG.H50 P1B.1132SG.H55 P1B.1132SG.H56 P1B.1132SG.H67



TO ORDER OPTIONAL:

P00.5598

Hose reservoir

TECHNICAL DETAILS SEE P.207



P1B.6518SB

Free-standing bath mixer with hand shower, without mounting plate

- Brass
- Free-standing spout:
  Spout outlet height: 759 mm
  Maximum spout projection: 184 mm
  Flowrate: 20L/min at 3bar
- 1.5 m Soft Touch silicone hose
- Brass single-jet hand shower
  with EASY CLEAN nozzles
  Flowrate: 8L/min at 3bar
- Manual mixing valve

P1B.6518SB.A02 P1B.6518SB.B01 P1B.6518SB.D30 P1B.6518SB.H49
P1B.6518SB.H50 P1B.6518SB.H55 P1B.6518SB.H56 P1B.6518SB.H67



TO ORDER WITH BUILT-IN FIXING PLATE:

P00.6518SA

TECHNICAL DETAILS SEE P.201

THERMOSTATIC BATH



P1B.6510BC

Thermostatic bath shower mixer with hook, hose and hand shower

- Brass
- Thermostatic control with temperature stop 38°C, max. 50°C
- Anti-scald safety THERMO COOL CONTACT
- 150 mm centres
- Maximum spout projection: 192 mm
  Flowrate: 20L/min at 3bar
- 1.5 m Soft Touch silicone hose
- Brass single-jet hand shower
  with EASY CLEAN nozzles
  Flowrate: 8L/min at 3bar

P1B.6510BC.A02 P1B.6510BC.B01 P1B.6510BC.D30 P1B.6510BC.H49
P1B.6510BC.H50 P1B.6510BC.H55 P1B.6510BC.H56 P1B.6510BC.H67

OPTION

3-JET HAND SHOWER EXTRA-COST

- EASY CLEAN nozzles
- Flowrate: 8L/min at 3bar



P00.0P3JA.A02 P00.0P3JA.B01 P00.0P3JA.D30 P00.0P3JA.H49
P00.0P3JA.H50 P00.0P3JA.H55 P00.0P3JA.H56 P00.0P3JA.H67

OBIONE

THERMOSTATIC BATH



P1B.6510BB

Thermostatic bath shower mixer with sliding bar, hose and hand shower

- Brass
- Thermostatic control with temperature stop 38°C, max. 50°C
- Anti-scald safety THERMO COOL CONTACT
- 150 mm centres
- Maximum spout projection: 192 mm
  Flowrate: 20L/min at 3bar
- 1.5 m Soft Touch silicone hose
- Brass single-jet hand shower
  with EASY CLEAN nozzles
  Flowrate: 8L/min at 3bar
- Slidebar height: 800 mm, 785 mm centres

P1B.65108B.A02 P1B.65108B.B01 P1B.6510BB.D30 P1B.6510BB.H49
P1B.65108B.H50 P1B.6510BB.H55 P1B.6510BB.H56 P1B.6510BB.H67



OPTION

3-JET HAND SHOWER EXTRA-COST

- EASY CLEAN nozzles
- Flowrate: 8L/min at 3bar



P00.0P3JA.A02 P00.0P3JA.B01 P00.0P3JA.D30 P00.0P3JA.H49
P00.0P3JA.H50 P00.0P3JA.H55 P00.0P3JA.H56 P00.0P3JA.H67



2-FUNCTION BATH SETS



- Trim only for manual mixing valve
- Automatic diverter
- Bathtub spout
- Set with single-jet hand shower and holder of your choice

PRODUCT INFORMATION

- Brass
- Maximum spout projection: 137 mm
  Flowrate: 20L/min at 3bar
- 1.5 m Soft Touch silicone hose
- Brass single-jet hand shower with EASY CLEAN nozzles
  Flowrate: 8L/min at 3bar

Model shown ref. P1B.6550RCS.H50



TO ORDER WITH ROUGH PART:

P00.6550SPA

TECHNICAL DETAILS SEE P.201

Hand shower and hook



P1B.6550RCS.A02 P1B.6550RCS.B01 P1B.6550RCS.D30 P1B.6550RCS.H49
P1B.6550RCS.H50 P1B.6550RCS.H55 P1B.6550RCS.H56 P1B.6550RCS.H67

Hand shower on rail
L800 mm, centre distance
785 mm



P1B.6550RBS.A02 P1B.6550RBS.B01 P1B.6550RBS.D30 P1B.6550RBS.H49
P1B.6550RBS.H50 P1B.6550RBS.H55 P1B.6550RBS.H56 P1B.6550RBS.H67



- Trim only for wall-mounted 3-hole bath mixer
- Trim only for manual mixing valve
- Set with single-jet hand shower and holder of your choice

PRODUCT INFORMATION

- Brass
- Maximum spout projection: 137 mm
  Flowrate: 20L/min at 3bar
- 1.5 m Soft Touch silicone hose
- Brass single-jet hand shower with EASY CLEAN nozzles
  Flowrate: 8L/min at 3bar

Model shown ref. P1B.41GM6561.H50



TO ORDER WITH ROUGH PART:

P00.40DMAC

TECHNICAL DETAILS SEE P.202

Hand shower and hook



P1B.41G6561.A02 P1B.41G6561.B01 P1B.41G6561.D30 P1B.41G6561.H49
P1B.41G6561.H50 P1B.41G6561.H55 P1B.41G6561.H56 P1B.41G6561.H67

Hand shower on rail
L800 mm, centre distance
785 mm



P1B.41G6571.A02 P1B.41G6571.B01 P1B.41G6571.D30 P1B.41G6571.H49
P1B.41G6571.H50 P1B.41G6571.H55 P1B.41G6571.H56 P1B.41G6571.H67

OPTION

3-JET HAND SHOWER EXTRA-COST

- EASY CLEAN nozzles
- Flowrate: 8L/min at 3bar



P00.OP3JA.A02 P00.OP3JA.B01 P00.OP3JA.D30 P00.OP3JA.H49
P00.OP3JA.H50 P00.OP3JA.H55 P00.OP3JA.H56 P00.OP3JA.H67

OBIONE

THERMOSTATIC 2-FUNCTION BATH SETS



- Trim for thermostatic mixer with 2 outlets
- Plate-mounted bathtub spout and single-jet hand shower
- Interchangeable spout and hand shower positioning

PRODUCT INFORMATION

- Brass
- 530x130 mm plate
- Maximum spout projection: 137 mm
  Flowrate: 20L/min at 3bar
- 1.5 m Soft Touch silicone hose
- Brass single-jet hand shower with EASY CLEAN nozzles
  Flowrate: 8L/min at 3bar



TO ORDER WITH ROUGH PART:

P00.THMV2X2

TECHNICAL DETAILS SEE P.202



EXTENSION AVAILABLE:

P00.THAL20

TECHNICAL DETAILS SEE P.207

P1B.BTHV2X2.A02 P1B.BTHV2X2.B01 P1B.BTHV2X2.D30 P1B.BTHV2X2.H49
P1B.BTHV2X2.H50 P1B.BTHV2X2.H55 P1B.BTHV2X2.H56 P1B.BTHV2X2.H67



- Trim for thermostatic mixer with 2 outlets and **PUSH** controls
- Bathtub spout or bath waste with integrated filling system
- Plate-mounted single-jet hand shower

PRODUCT INFORMATION

- Brass
- 380x130 mm plate
- Maximum spout projection: 137 mm
  Flowrate: 20L/min at 3bar
- 1.5 m Soft Touch silicone hose
- Brass single-jet hand shower with EASY CLEAN nozzles
  Flowrate: 8L/min at 3bar

Model shown ref. P1B.P2RDS.H50



TO ORDER WITH ROUGH PART:

P00.THMP2RX1

TECHNICAL DETAILS SEE P.202



EXTENSION AVAILABLE:

P00.THAL20

TECHNICAL DETAILS SEE P.207

Wall spout



P1B.P2RDS.A02 P1B.P2RDS.B01 P1B.P2RDS.D30 P1B.P2RDS.H49
P1B.P2RDS.H50 P1B.P2RDS.H55 P1B.P2RDS.H56 P1B.P2RDS.H67

Filling system via discharge wheel



P1B.P2RDF.A02 P1B.P2RDF.B01 P1B.P2RDF.D30 P1B.P2RDF.H49
P1B.P2RDF.H50 P1B.P2RDF.H55 P1B.P2RDF.H56 P1B.P2RDF.H67

Outlet for filling system via discharge wheel

NOT PROVIDED

P1B.BTHP2RX1.A02 P1B.BTHP2RX1.B01 P1B.BTHP2RX1.D30 P1B.BTHP2RX1.H49
P1B.BTHP2RX1.H50 P1B.BTHP2RX1.H55 P1B.BTHP2RX1.H56 P1B.BTHP2RX1.H67

OPTION

3-JET HAND SHOWER EXTRA-COST

- EASY CLEAN nozzles
- Flowrate: 8L/min at 3bar



P00.OP3JA.A02 P00.OP3JA.B01 P00.OP3JA.D30 P00.OP3JA.H49
P00.OP3JA.H50 P00.OP3JA.H55 P00.OP3JA.H56 P00.OP3JA.H67

THERMOSTATIC 3-FUNCTION BATH SETS



- Trim for thermostatic mixer with 3 outlets
- Showerhead 300x300 mm with shower arm of your choice
- Bathtub spout
- Set with single-jet hand shower and holder of your choice

PRODUCT INFORMATION

- Brass
- 445x130 mm plate
- Maximum spout projection: 137 mm
  Flowrate: 20L/min at 3bar
- Brass showerhead with EASY CLEAN nozzles
  Flowrate: 9.5L/min at 3bar
- 1.5 m Soft Touch silicone hose
- Brass single-jet hand shower with EASY CLEAN nozzles
  Flowrate: 8L/min at 3bar

Model shown ref. P1B.V3MH7CS.H50





TO ORDER WITH ROUGH PART:

P00.THMV3R
Left-hand mixer tap
TECHNICAL DETAILS SEE P.203



EXTENSION AVAILABLE:

P00.THAL20
TECHNICAL DETAILS SEE P.207

 Wall arm L350 mm and showerhead 300x300 mm	Hand shower and hook		P1B.V3MH7CS.A02	P1B.V3MH7CS.B01	P1B.V3MH7CS.D30	P1B.V3MH7CS.H49
			P1B.V3MH7CS.H50	P1B.V3MH7CS.H55	P1B.V3MH7CS.H56	P1B.V3MH7CS.H67
	Hand shower on rail L800 mm, centre distance 785 mm		P1B.V3MH7BS.A02	P1B.V3MH7BS.B01	P1B.V3MH7BS.D30	P1B.V3MH7BS.H49
			P1B.V3MH7BS.H50	P1B.V3MH7BS.H55	P1B.V3MH7BS.H56	P1B.V3MH7BS.H67
 Vertical arm L120 mm and showerhead 300x300 mm	Hand shower and hook		P1B.V3MH8CS.A02	P1B.V3MH8CS.B01	P1B.V3MH8CS.D30	P1B.V3MH8CS.H49
			P1B.V3MH8CS.H50	P1B.V3MH8CS.H55	P1B.V3MH8CS.H56	P1B.V3MH8CS.H67
	Hand shower on rail L800 mm, centre distance 785 mm		P1B.V3MH8BS.A02	P1B.V3MH8BS.B01	P1B.V3MH8BS.D30	P1B.V3MH8BS.H49
			P1B.V3MH8BS.H50	P1B.V3MH8BS.H55	P1B.V3MH8BS.H56	P1B.V3MH8BS.H67

OPTION

3-JET HAND SHOWER EXTRA-COST

- EASY CLEAN nozzles
- Flowrate: 8L/min at 3bar



P00.OP3JA.A02	P00.OP3JA.B01	P00.OP3JA.D30	P00.OP3JA.H49
P00.OP3JA.H50	P00.OP3JA.H55	P00.OP3JA.H56	P00.OP3JA.H67

OBIONE

THERMOSTATIC 3-FUNCTION BATH SETS



- Trim for thermostatic mixer with 3 outlets and **PUSH** controls
- Showerhead 300x300 mm with shower arm of your choice
- Bathtub spout or bath waste with integrated filling system
- Plate-mounted single-jet hand shower

PRODUCT INFORMATION

- Brass
- 470x130 mm plate
- Maximum spout projection: 137 mm
  Flowrate: 20L/min at 3bar
- Brass showerhead with EASY CLEAN nozzles
  Flowrate: 9.5L/min at 3bar
- 1.5 m Soft Touch silicone hose
- Brass single-jet hand shower with EASY CLEAN nozzles
  Flowrate: 8L/min at 3bar

Model shown ref. P1B.P3MRX7S.H50





TO ORDER WITH ROUGH PART:

P00.THMP3RX1

TECHNICAL DETAILS SEE P.204



EXTENSION AVAILABLE:

P00.THAL20

TECHNICAL DETAILS SEE P.207



Wall arm L350 mm and showerhead 300x300 mm

Wall spout		P1B.P3MRX7S.A02	P1B.P3MRX7S.B01	P1B.P3MRX7S.D30	P1B.P3MRX7S.H49
		P1B.P3MRX7S.H50	P1B.P3MRX7S.H55	P1B.P3MRX7S.H56	P1B.P3MRX7S.H67
Filling system via discharge wheel		P1B.P3MRX7F.A02	P1B.P3MRX7F.B01	P1B.P3MRX7F.D30	P1B.P3MRX7F.H49
		P1B.P3MRX7F.H50	P1B.P3MRX7F.H55	P1B.P3MRX7F.H56	P1B.P3MRX7F.H67
Outlet for filling system via discharge wheel	**NOT PROVIDED**	P1B.P3MRX7X.A02	P1B.P3MRX7X.B01	P1B.P3MRX7X.D30	P1B.P3MRX7X.H49
		P1B.P3MRX7X.H50	P1B.P3MRX7X.H55	P1B.P3MRX7X.H56	P1B.P3MRX7X.H67



Vertical arm L120 mm and showerhead 300x300 mm

Wall spout		P1B.P3MRX8S.A02	P1B.P3MRX8S.B01	P1B.P3MRX8S.D30	P1B.P3MRX8S.H49
		P1B.P3MRX8S.H50	P1B.P3MRX8S.H55	P1B.P3MRX8S.H56	P1B.P3MRX8S.H67
Filling system via discharge wheel		P1B.P3MRX8F.A02	P1B.P3MRX8F.B01	P1B.P3MRX8F.D30	P1B.P3MRX8F.H49
		P1B.P3MRX8F.H50	P1B.P3MRX8F.H55	P1B.P3MRX8F.H56	P1B.P3MRX8F.H67
Outlet for filling system via discharge wheel	**NOT PROVIDED**	P1B.P3MRX8X.A02	P1B.P3MRX8X.B01	P1B.P3MRX8X.D30	P1B.P3MRX8X.H49
		P1B.P3MRX8X.H50	P1B.P3MRX8X.H55	P1B.P3MRX8X.H56	P1B.P3MRX8X.H67

OPTION

3-JET HAND SHOWER EXTRA-COST

- EASY CLEAN nozzles
- Flowrate: 8L/min at 3bar



P00.OP3JA.A02	P00.OP3JA.B01	P00.OP3JA.D30	P00.OP3JA.H49
P00.OP3JA.H50	P00.OP3JA.H55	P00.OP3JA.H56	P00.OP3JA.H67

BATH WASTE



P1B.302

Geberit bath waste, adjustable height: mini 165 mm / maxi 390 mm; adjustable projection: mini 110 mm / maxi 230 mm, outlet Ø 40 mm, - European model 150.616.21.1

- **Brass drain handle and valve**
- **For bathtub with a Ø52 mm waste opening**

P1B.302.A02 P1B.302.D30 P1B.302.H49
P1B.302.H50 P1B.302.H55 P1B.302.H56 P1B.302.H67



P1B.302GM

Geberit bath waste, big size, adjustable height: mini 165 mm / maxi 580 mm; adjustable projection: mini 110 mm / maxi 700 mm - outlet, Ø 40 mm, delivered with stylised control knob - European model 150.616.21.1

- **Brass drain handle and valve**
- **For bathtub with a Ø52 mm waste opening**

P1B.302GM.A02 P1B.302GM.D30 P1B.302GM.H49
P1B.302GM.H50 P1B.302GM.H55 P1B.302GM.H56 P1B.302GM.H67



P00.305/H

Complete manual bath click waste, for baths with integrated overflow or overflow rim

- **Brass valve and waste, plated**
- **For bathtub with a Ø52 mm waste opening, Ø70 mm cap**
- **Brass drain and plug**

P00.305/H.A02 P00.305/H.D30 P00.305/H.H49
P00.305/H.H50 P00.305/H.H55 P00.305/H.H56 P00.305/H.H67

OBIONE

THERMOSTATIC SHOWER



P1B.6528BB

Wall mounted thermostatic shower mixer ½" with sliding bar, hose and hand shower

- Brass
- Thermostatic control with temperature stop 38°C, max. 50°C
- Anti-scald safety THERMO COOL CONTACT
- 150 mm centres
- 1.5 m Soft Touch silicone hose
- Brass single-jet hand shower with EASY CLEAN nozzles Flowrate: 8L/min at 3bar
- Slidebar height: 800 mm, 785 mm

P1B.6528BB.A02 P1B.6528BB.B01 P1B.6528BB.D30 P1B.6528BB.H49
P1B.6528BB.H50 P1B.6528BB.H55 P1B.6528BB.H56 P1B.6528BB.H67



P1B.6529CD

Wall mounted thermostatic shower mixer ½" with shower column, shower head 200x200 mm, hose and hand shower

- Brass
- Thermostatic control with temperature stop 38°C, max. 50°C
- Anti-scald safety THERMO COOL CONTACT
- 150 mm centres
- Brass showerhead 200x200 mm with EASY CLEAN nozzles Flowrate: 9.5L/min at 3bar
- 1.5 m Soft Touch silicone hose
- Brass single-jet hand shower with EASY CLEAN nozzles Flowrate: 8L/min at 3bar
- Height: 1163 mm -Maximum showerhead projection: 463 mm - Fixing distance: 937 mm

P1B.6529CD.A02 P1B.6529CD.B01 P1B.6529CD.D30 P1B.6529CD.H49
P1B.6529CD.H50 P1B.6529CD.H55 P1B.6529CD.H56 P1B.6529CD.H67



P1B.6529CG

Wall mounted thermostatic shower mixer ½" with shower column, shower head 300x300 mm, hand shower and hose

- Brass
- Thermostatic control with temperature stop 38°C, max. 50°C
- Anti-scald safety THERMO COOL CONTACT
- 150 mm centres
- Brass showerhead 300x300 mm with EASY CLEAN nozzles Flowrate: 9.5L/min at 3bar
- 1.5 m Soft Touch silicone hose
- Brass single-jet hand shower with EASY CLEAN nozzles Flowrate: 8L/min at 3bar
- Height: 1163 mm - Maximum showerhead projection: 463 mm - Fixing distance: 937 mm

P1B.6529CG.A02 P1B.6529CG.B01 P1B.6529CG.D30 P1B.6529CG.H49
P1B.6529CG.H50 P1B.6529CG.H55 P1B.6529CG.H56 P1B.6529CG.H67

OPTION

3-JET HAND SHOWER EXTRA-COST

- EASY CLEAN nozzles
- Flowrate: 8L/min at 3bar



P00.0P3JA.A02 P00.0P3JA.B01 P00.0P3JA.D30 P00.0P3JA.H49
P00.0P3JA.H50 P00.0P3JA.H55 P00.0P3JA.H56 P00.0P3JA.H67

OBIONE

SINGLE-FUNCTION SHOWER SET



- Trim only for manual mixing valve
- Slidebar and single-jet hand shower

PRODUCT INFORMATION

- Brass
- 1.5 m Soft Touch silicone hose
- Brass single-jet hand shower with EASY CLEAN nozzles Flowrate: 8L/min at 3bar
- Slidebar height: 800 mm, 785 mm centres



TO ORDER WITH ROUGH PART:

P00.6541SPA

TECHNICAL DETAILS SEE P.200

P1B.6571SPB.A02 P1B.6571SPB.B01 P1B.6571SPB.D30 P1B.6571SPB.H49
P1B.6571SPB.H50 P1B.6571SPB.H55 P1B.6571SPB.H56 P1B.6571SPB.H67

2-FUNCTION SHOWER SETS



- Trim only for manual mixing valve
- Automatic diverter
- Showerhead 200x200 mm with wall-mounted shower arm
- Set with single-jet hand shower and holder of your choice

PRODUCT INFORMATION

- Brass
- Brass showerhead with EASY CLEAN nozzles Flowrate: 9.5L/min at 3bar
- 1.5 m Soft Touch silicone hose
- Brass single-jet hand shower with EASY CLEAN nozzles Flowrate: 8L/min at 3bar

Model shown ref. P1B.6550R3C.H50





TO ORDER WITH ROUGH PART:

P00.6550SPA

TECHNICAL DETAILS SEE P.201



Wall arm L350 mm and showerhead 200x200 mm



Hand shower and hook

P1B.6550R3C.A02 P1B.6550R3C.B01 P1B.6550R3C.D30 P1B.6550R3C.H49
P1B.6550R3C.H50 P1B.6550R3C.H55 P1B.6550R3C.H56 P1B.6550R3C.H67



Hand shower on rail L800 mm, centre distance 785 mm

P1B.6550R3B.A02 P1B.6550R3B.B01 P1B.6550R3B.D30 P1B.6550R3B.H49
P1B.6550R3B.H50 P1B.6550R3B.H55 P1B.6550R3B.H56 P1B.6550R3B.H67

OPTION

3-JET HAND SHOWER EXTRA-COST

- EASY CLEAN nozzles
- Flowrate: 8L/min at 3bar



P00.0P3JA.A02 P00.0P3JA.B01 P00.0P3JA.D30 P00.0P3JA.H49
P00.0P3JA.H50 P00.0P3JA.H55 P00.0P3JA.H56 P00.0P3JA.H67

OBIONE

2-FUNCTION THERMOSTATIC SHOWER SETS



- Trim for thermostatic mixer with 2 outlets
- Showerhead 200x200 mm with shower arm of your choice
- Set with single-jet hand shower and holder of your choice

PRODUCT INFORMATION

- Brass
- 130x205 mm plate
- Brass showerhead with EASY CLEAN nozzles Flowrate: 9.5L/min at 3bar
- 1.5 m Soft Touch silicone hose
- Brass single-jet hand shower with EASY CLEAN nozzles Flowrate: 8L/min at 3bar

Model shown ref. P1B.D2M3C.H50





TO ORDER WITH ROUGH PART:

P00.THMD2

TECHNICAL DETAILS SEE P.204



EXTENSION AVAILABLE:

P00.THAL20

TECHNICAL DETAILS SEE P.207

Wall arm L350 mm and showerhead 200x200 mm	Hand shower and hook		P1B.D2M3C.A02 P1B.D2M3C.H50	P1B.D2M3C.B01 P1B.D2M3C.H55	P1B.D2M3C.D30 P1B.D2M3C.H56	P1B.D2M3C.H49 P1B.D2M3C.H67
	Hand shower and shelf 300x100 mm		P1B.D2M3T.A02 P1B.D2M3T.H50	P1B.D2M3T.B01 P1B.D2M3T.H55	P1B.D2M3T.D30 P1B.D2M3T.H56	P1B.D2M3T.H49 P1B.D2M3T.H67
	Hand shower on rail L800 mm, centre distance 785 mm		P1B.D2M3B.A02 P1B.D2M3B.H50	P1B.D2M3B.B01 P1B.D2M3B.H55	P1B.D2M3B.D30 P1B.D2M3B.H56	P1B.D2M3B.H49 P1B.D2M3B.H67
Vertical arm L120 mm and showerhead 200x200 mm	Hand shower and hook		P1B.D2M4C.A02 P1B.D2M4C.H50	P1B.D2M4C.B01 P1B.D2M4C.H55	P1B.D2M4C.D30 P1B.D2M4C.H56	P1B.D2M4C.H49 P1B.D2M4C.H67
	Hand shower and shelf 300x100 mm		P1B.D2M4T.A02 P1B.D2M4T.H50	P1B.D2M4T.B01 P1B.D2M4T.H55	P1B.D2M4T.D30 P1B.D2M4T.H56	P1B.D2M4T.H49 P1B.D2M4T.H67
	Hand shower on rail L800 mm, centre distance 785 mm		P1B.D2M4B.A02 P1B.D2M4B.H50	P1B.D2M4B.B01 P1B.D2M4B.H55	P1B.D2M4B.D30 P1B.D2M4B.H56	P1B.D2M4B.H49 P1B.D2M4B.H67

OPTION

3-JET HAND SHOWER EXTRA-COST

- EASY CLEAN nozzles
- Flowrate: 8L/min at 3bar



P00.OP3JA.A02 P00.OP3JA.H50	P00.OP3JA.B01 P00.OP3JA.H55	P00.OP3JA.D30 P00.OP3JA.H56	P00.OP3JA.H49 P00.OP3JA.H67

2-FUNCTION THERMOSTATIC SHOWER SETS



- Trim for thermostatic mixer with 2 outlets
- Stainless steel sky shower 380x380 mm
- Set with single-jet hand shower and holder of your choice

PRODUCT INFORMATION

- Brass
- 130x335 mm plate
- Sky shower with EASY CLEAN nozzles Flowrate: 14.5L/min at 3bar
- 1.5 m Soft Touch silicone hose
- Brass single-jet hand shower with EASY CLEAN nozzles Flowrate: 8L/min at 3bar

Model shown ref. P1B.V2MH10C.H50

PLEASE NOTE: FOR PACKS ORDERED IN FINISHES A02 AND B01, THE SKYSHOWER WILL BE DELIVERED IN A POLISHED STAINLESS STEEL FINISH.





TO ORDER WITH ROUGH PART:

P00.THMV2H

TECHNICAL DETAILS SEE P.205



EXTENSION AVAILABLE:

P00.THAL20

TECHNICAL DETAILS SEE P.207

Skyshower 380x380 mm	Hand shower and hook		P1B.V2MH10C.A02	P1B.V2MH10C.B01	P1B.V2MH10C.D30	P1B.V2MH10C.H49
			P1B.V2MH10C.H50	P1B.V2MH10C.H55	P1B.V2MH10C.H56	P1B.V2MH10C.H67
	Hand shower and shelf 300x100 mm		P1B.V2MH10T.A02	P1B.V2MH10T.B01	P1B.V2MH10T.D30	P1B.V2MH10T.H49
			P1B.V2MH10T.H50	P1B.V2MH10T.H55	P1B.V2MH10T.H56	P1B.V2MH10T.H67
	Hand shower on rail L800 mm, centre distance 785 mm		P1B.V2MH10B.A02	P1B.V2MH10B.B01	P1B.V2MH10B.D30	P1B.V2MH10B.H49
			P1B.V2MH10B.H50	P1B.V2MH10B.H55	P1B.V2MH10B.H56	P1B.V2MH10B.H67

OPTION

3-JET HAND SHOWER EXTRA-COST

- EASY CLEAN nozzles
- Flowrate: 8L/min at 3bar



P00.OP3JA.A02	P00.OP3JA.B01	P00.OP3JA.D30	P00.OP3JA.H49
P00.OP3JA.H50	P00.OP3JA.H55	P00.OP3JA.H56	P00.OP3JA.H67

OBIONE

2-FUNCTION THERMOSTATIC SHOWER SETS



- Trim for thermostatic mixer with 2 outlets
- Showerhead 300x300 mm with shower arm of your choice
- Set with single-jet hand shower and holder of your choice

PRODUCT INFORMATION

- Brass
- 130x335 mm plate
- Brass showerhead with EASY CLEAN nozzles Flowrate: 9.5L/min at 3bar
- 1.5 m Soft Touch silicone hose
- Brass single-jet hand shower with EASY CLEAN nozzles Flowrate: 8L/min at 3bar

Model shown ref. P1B.V2MH7C.H50





TO ORDER WITH ROUGH PART:

P00.THMV2H

TECHNICAL DETAILS SEE P.205



EXTENSION AVAILABLE:

P00.THAL20

TECHNICAL DETAILS SEE P.207

Wall arm L350 mm and showerhead 300x300 mm	Hand shower and hook		P1B.V2MH7C.A02	P1B.V2MH7C.B01	P1B.V2MH7C.D30	P1B.V2MH7C.H49
			P1B.V2MH7C.H50	P1B.V2MH7C.H55	P1B.V2MH7C.H56	P1B.V2MH7C.H67
	Hand shower and shelf 300x100 mm		P1B.V2MH7T.A02	P1B.V2MH7T.B01	P1B.V2MH7T.D30	P1B.V2MH7T.H49
			P1B.V2MH7T.H50	P1B.V2MH7T.H55	P1B.V2MH7T.H56	P1B.V2MH7T.H67
	Hand shower on rail L800 mm, centre distance 785 mm		P1B.V2MH7B.A02	P1B.V2MH7B.B01	P1B.V2MH7B.D30	P1B.V2MH7B.H49
			P1B.V2MH7B.H50	P1B.V2MH7B.H55	P1B.V2MH7B.H56	P1B.V2MH7B.H67
Vertical arm L120 mm and showerhead 300x300 mm	Hand shower and hook		P1B.V2MH8C.A02	P1B.V2MH8C.B01	P1B.V2MH8C.D30	P1B.V2MH8C.H49
			P1B.V2MH8C.H50	P1B.V2MH8C.H55	P1B.V2MH8C.H56	P1B.V2MH8C.H67
	Hand shower and shelf 300x100 mm		P1B.V2MH8T.A02	P1B.V2MH8T.B01	P1B.V2MH8T.D30	P1B.V2MH8T.H49
			P1B.V2MH8T.H50	P1B.V2MH8T.H55	P1B.V2MH8T.H56	P1B.V2MH8T.H67
	Hand shower on rail L800 mm, centre distance 785 mm		P1B.V2MH8B.A02	P1B.V2MH8B.B01	P1B.V2MH8B.D30	P1B.V2MH8B.H49
			P1B.V2MH8B.H50	P1B.V2MH8B.H55	P1B.V2MH8B.H56	P1B.V2MH8B.H67

OPTION

3-JET HAND SHOWER EXTRA-COST

- EASY CLEAN nozzles
- Flowrate: 8L/min at 3bar



P00.OP3JA.A02	P00.OP3JA.B01	P00.OP3JA.D30	P00.OP3JA.H49
P00.OP3JA.H50	P00.OP3JA.H55	P00.OP3JA.H56	P00.OP3JA.H67



OBIONE

2-FUNCTION THERMOSTATIC SHOWER SETS



- Trim for thermostatic mixer with 2 outlets
- Stainless steel sky shower 380x380 mm or showerhead 300x300 mm with shower arm of your choice
- Plate-mounted single-jet hand shower

PRODUCT INFORMATION

- Brass
- 440x130 mm plate
- Brass showerhead with EASY CLEAN nozzles Flowrate: 9.5L/min at 3bar
- Sky shower with EASY CLEAN nozzles Flowrate: 14.5L/min at 3bar
- 1.5 m Soft Touch silicone hose
- Brass single-jet hand shower with EASY CLEAN nozzles Flowrate: 8L/min at 3bar

Model shown ref. P1B.V2MRX7.H50

PLEASE NOTE: FOR PACKS ORDERED IN FINISHES A02 AND B01, THE SKYSHOWER WILL BE DELIVERED IN A POLISHED STAINLESS STEEL FINISH.





TO ORDER WITH ROUGH PART:

P00.THMV2RX1

TECHNICAL DETAILS SEE P.205



EXTENSION AVAILABLE:

P00.THAL20

TECHNICAL DETAILS SEE P.207

Wall arm L350 mm and showerhead 300x300 mm		P1B.V2MRX7.A02	P1B.V2MRX7.B01	P1B.V2MRX7.D30	P1B.V2MRX7.H49
		P1B.V2MRX7.H50	P1B.V2MRX7.H55	P1B.V2MRX7.H56	P1B.V2MRX7.H67
Vertical arm L120 mm and showerhead 300x300 mm		P1B.V2MRX8.A02	P1B.V2MRX8.B01	P1B.V2MRX8.D30	P1B.V2MRX8.H49
		P1B.V2MRX8.H50	P1B.V2MRX8.H55	P1B.V2MRX8.H56	P1B.V2MRX8.H67
Skyshower 380x380 mm		P1B.V2MRX10.A02	P1B.V2MRX10.B01	P1B.V2MRX10.D30	P1B.V2MRX10.H49
		P1B.V2MRX10.H50	P1B.V2MRX10.H55	P1B.V2MRX10.H56	P1B.V2MRX10.H67

OPTION

3-JET HAND SHOWER EXTRA-COST

- EASY CLEAN nozzles
- Flowrate: 8L/min at 3bar



P00.OP3JA.A02	P00.OP3JA.B01	P00.OP3JA.D30	P00.OP3JA.H49
P00.OP3JA.H50	P00.OP3JA.H55	P00.OP3JA.H56	P00.OP3JA.H67

2-FUNCTION THERMOSTATIC SHOWER SETS



- Trim for thermostatic mixer with 2 outlets
- Trim only for valves
- Showerhead 200x200 mm with shower arm of your choice
- Set with single-jet hand shower and holder of your choice

PRODUCT INFORMATION

- Brass
- Brass showerhead with EASY CLEAN nozzles Flowrate: 9.5L/min at 3bar
- 1.5 m Soft Touch silicone hose
- Brass single-jet hand shower with EASY CLEAN nozzles Flowrate: 8L/min at 3bar

Model shown ref. P1B.BV2M3C.H50





TO ORDER WITH ROUGH PART:

P00.THM2VA

TECHNICAL DETAILS SEE P.206



EXTENSION AVAILABLE:

P00.THAL20

TECHNICAL DETAILS SEE P.207

Wall arm L350 mm and showerhead 200x200 mm	Hand shower and hook		P1B.BV2M3C.A02	P1B.BV2M3C.B01	P1B.BV2M3C.D30	P1B.BV2M3C.H49
			P1B.BV2M3C.H50	P1B.BV2M3C.H55	P1B.BV2M3C.H56	P1B.BV2M3C.H67
	Hand shower and shelf 300x100 mm		P1B.BV2M3T.A02	P1B.BV2M3T.B01	P1B.BV2M3T.D30	P1B.BV2M3T.H49
			P1B.BV2M3T.H50	P1B.BV2M3T.H55	P1B.BV2M3T.H56	P1B.BV2M3T.H67
	Hand shower on rail L800 mm, centre distance 785 mm		P1B.BV2M3B.A02	P1B.BV2M3B.B01	P1B.BV2M3B.D30	P1B.BV2M3B.H49
			P1B.BV2M3B.H50	P1B.BV2M3B.H55	P1B.BV2M3B.H56	P1B.BV2M3B.H67
Vertical arm L120 mm and showerhead 200x200 mm	Hand shower and hook		P1B.BV2M4C.A02	P1B.BV2M4C.B01	P1B.BV2M4C.D30	P1B.BV2M4C.H49
			P1B.BV2M4C.H50	P1B.BV2M4C.H55	P1B.BV2M4C.H56	P1B.BV2M4C.H67
	Hand shower and shelf 300x100 mm		P1B.BV2M4T.A02	P1B.BV2M4T.B01	P1B.BV2M4T.D30	P1B.BV2M4T.H49
			P1B.BV2M4T.H50	P1B.BV2M4T.H55	P1B.BV2M4T.H56	P1B.BV2M4T.H67
	Hand shower on rail L800 mm, centre distance 785 mm		P1B.BV2M4B.A02	P1B.BV2M4B.B01	P1B.BV2M4B.D30	P1B.BV2M4B.H49
			P1B.BV2M4B.H50	P1B.BV2M4B.H55	P1B.BV2M4B.H56	P1B.BV2M4B.H67

OPTION

3-JET HAND SHOWER EXTRA-COST

- EASY CLEAN nozzles
- Flowrate: 8L/min at 3bar



P00.OP3JA.A02	P00.OP3JA.B01	P00.OP3JA.D30	P00.OP3JA.H49
P00.OP3JA.H50	P00.OP3JA.H55	P00.OP3JA.H56	P00.OP3JA.H67

OBIONE

2-FUNCTION THERMOSTATIC SHOWER SETS



- Trim for thermostatic mixer with 2 outlets
- Trim only for valves
- Stainless steel sky shower 380x380 mm
- Set with single-jet hand shower and holder of your choice

PRODUCT INFORMATION

- Brass
- Sky shower with EASY CLEAN nozzles Flowrate: 14.5L/min at 3bar
- 1.5 m Soft Touch silicone hose
- Brass single-jet hand shower with EASY CLEAN nozzles Flowrate: 8L/min at 3bar

Model shown ref. P1B.BV2M10C.H50

PLEASE NOTE: FOR PACKS ORDERED IN FINISHES A02 AND B01, THE SKYSHOWER WILL BE DELIVERED IN A POLISHED STAINLESS STEEL FINISH.





TO ORDER WITH ROUGH PART:

P00.THM2VA

TECHNICAL DETAILS SEE P.206



EXTENSION AVAILABLE:

P00.THAL20

TECHNICAL DETAILS SEE P.207

	Hand shower and hook		P1B.BV2M10C.A02 P1B.BV2M10C.B01 P1B.BV2M10C.D30 P1B.BV2M10C.H49 P1B.BV2M10C.H50 P1B.BV2M10C.H55 P1B.BV2M10C.H56 P1B.BV2M10C.H67
 Skyshower 380x380 mm	Hand shower and shelf 300x100 mm		P1B.BV2M10T.A02 P1B.BV2M10T.B01 P1B.BV2M10T.D30 P1B.BV2M10T.H49 P1B.BV2M10T.H50 P1B.BV2M10T.H55 P1B.BV2M10T.H56 P1B.BV2M10T.H67
	Hand shower on rail L800 mm, centre distance 785 mm		P1B.BV2M10B.A02 P1B.BV2M10B.B01 P1B.BV2M10B.D30 P1B.BV2M10B.H49 P1B.BV2M10B.H50 P1B.BV2M10B.H55 P1B.BV2M10B.H56 P1B.BV2M10B.H67

OPTION

3-JET HAND SHOWER EXTRA-COST

- EASY CLEAN nozzles
- Flowrate: 8L/min at 3bar



P00.OP3JA.A02	P00.OP3JA.B01	P00.OP3JA.D30	P00.OP3JA.H49
P00.OP3JA.H50	P00.OP3JA.H55	P00.OP3JA.H56	P00.OP3JA.H67

2-FUNCTION THERMOSTATIC SHOWER SETS



- Trim for thermostatic mixer with 2 outlets and **PUSH** controls
- Showerhead 200x200 mm with shower arm of your choice
- Set with single-jet hand shower and holder of your choice

PRODUCT INFORMATION

- Brass
- 130x295 mm plate
- Brass showerhead with EASY CLEAN nozzles Flowrate: 9.5L/min at 3bar
- 1.5 m Soft Touch silicone hose
- Brass single-jet hand shower with EASY CLEAN nozzles Flowrate: 8L/min at 3bar

Model shown ref. P1B.P2MH3C.H50





TO ORDER WITH ROUGH PART:

P00.THMP2H

TECHNICAL DETAILS SEE P.206



EXTENSION AVAILABLE:

P00.THAL20

TECHNICAL DETAILS SEE P.207





Wall arm L350 mm and showerhead 200x200 mm

Hand shower and hook	P1B.P2MH3C.A02	P1B.P2MH3C.B01	P1B.P2MH3C.D30	P1B.P2MH3C.H49
	P1B.P2MH3C.H50	P1B.P2MH3C.H55	P1B.P2MH3C.H56	P1B.P2MH3C.H67
Hand shower and shelf 300x100 mm	P1B.P2MH3T.A02	P1B.P2MH3T.B01	P1B.P2MH3T.D30	P1B.P2MH3T.H49
	P1B.P2MH3T.H50	P1B.P2MH3T.H55	P1B.P2MH3T.H56	P1B.P2MH3T.H67
Hand shower on rail L800 mm, centre distance 785 mm	P1B.P2MH3B.A02	P1B.P2MH3B.B01	P1B.P2MH3B.D30	P1B.P2MH3B.H49
	P1B.P2MH3B.H50	P1B.P2MH3B.H55	P1B.P2MH3B.H56	P1B.P2MH3B.H67



Vertical arm L120 mm and showerhead 200x200 mm

Hand shower and hook	P1B.P2MH4C.A02	P1B.P2MH4C.B01	P1B.P2MH4C.D30	P1B.P2MH4C.H49
	P1B.P2MH4C.H50	P1B.P2MH4C.H55	P1B.P2MH4C.H56	P1B.P2MH4C.H67
Hand shower and shelf 300x100 mm	P1B.P2MH4T.A02	P1B.P2MH4T.B01	P1B.P2MH4T.D30	P1B.P2MH4T.H49
	P1B.P2MH4T.H50	P1B.P2MH4T.H55	P1B.P2MH4T.H56	P1B.P2MH4T.H67
Hand shower on rail L800 mm, centre distance 785 mm	P1B.P2MH4B.A02	P1B.P2MH4B.B01	P1B.P2MH4B.D30	P1B.P2MH4B.H49
	P1B.P2MH4B.H50	P1B.P2MH4B.H55	P1B.P2MH4B.H56	P1B.P2MH4B.H67

OPTION

3-JET HAND SHOWER EXTRA-COST

- EASY CLEAN nozzles
- Flowrate: 8L/min at 3bar



P00.OP3JA.A02	P00.OP3JA.B01	P00.OP3JA.D30	P00.OP3JA.H49
P00.OP3JA.H50	P00.OP3JA.H55	P00.OP3JA.H56	P00.OP3JA.H67

OBIONE

2-FUNCTION THERMOSTATIC SHOWER SETS



- Trim for thermostatic mixer with 2 outlets and **PUSH** controls
- Stainless steel sky shower 380x380 mm
- Set with single-jet hand shower and holder of your choice

PRODUCT INFORMATION

- Brass
- 130x295 mm plate
- Sky shower with EASY CLEAN nozzles Flowrate: 14.5L/min at 3bar
- 1.5 m Soft Touch silicone hose
- Brass single-jet hand shower with EASY CLEAN nozzles Flowrate: 8L/min at 3bar

Model shown ref. P1B.P2MH10C.H50

PLEASE NOTE: FOR PACKS ORDERED IN FINISHES A02 AND B01, THE SKYSHOWER WILL BE DELIVERED IN A POLISHED STAINLESS STEEL FINISH.





TO ORDER WITH ROUGH PART:

P00.THMP2H

TECHNICAL DETAILS SEE P.206



EXTENSION AVAILABLE:

P00.THAL20

TECHNICAL DETAILS SEE P.207

Skyshower 380x380 mm	Hand shower and hook		P1B.P2MH10C.A02	P1B.P2MH10C.B01	P1B.P2MH10C.D30	P1B.P2MH10C.H49
			P1B.P2MH10C.H50	P1B.P2MH10C.H55	P1B.P2MH10C.H56	P1B.P2MH10C.H67
	Hand shower and shelf 300x100 mm		P1B.P2MH10T.A02	P1B.P2MH10T.B01	P1B.P2MH10T.D30	P1B.P2MH10T.H49
			P1B.P2MH10T.H50	P1B.P2MH10T.H55	P1B.P2MH10T.H56	P1B.P2MH10T.H67
	Hand shower on rail L800 mm, centre distance 785 mm		P1B.P2MH10B.A02	P1B.P2MH10B.B01	P1B.P2MH10B.D30	P1B.P2MH10B.H49
			P1B.P2MH10B.H50	P1B.P2MH10B.H55	P1B.P2MH10B.H56	P1B.P2MH10B.H67

OPTION

3-JET HAND SHOWER EXTRA-COST

- EASY CLEAN nozzles
- Flowrate: 8L/min at 3bar



P00.OP3JA.A02	P00.OP3JA.B01	P00.OP3JA.D30	P00.OP3JA.H49
P00.OP3JA.H50	P00.OP3JA.H55	P00.OP3JA.H56	P00.OP3JA.H67

3-FUNCTION THERMOSTATIC SHOWER SETS





- Trim for thermostatic mixer with 3 outlets
- Stainless steel wall-mounted shower water blade
- Showerhead 300x300 mm with shower arm of your choice
- Set with single-jet hand shower and holder of your choice

PRODUCT INFORMATION

- Brass
- 130x445 mm plate
- Brass showerhead with EASY CLEAN nozzles Flowrate: 9.5L/min at 3bar
- Wall-mounted shower water blade flowrate: 17L/min at 3bar
- 1.5 m Soft Touch silicone hose
- Brass single-jet hand shower with EASY CLEAN nozzles Flowrate: 8L/min at 3bar

Model shown ref. P1B.V3MH7CL.H50

PLEASE NOTE: FOR PACKS ORDERED IN FINISHES A02 AND B01, THE WATER BLADE WILL BE DELIVERED IN A POLISHED STAINLESS STEEL FINISH.



TO ORDER WITH ROUGH PART:
P00.THMV3H
TECHNICAL DETAILS SEE P.203



EXTENSION AVAILABLE:
P00.THAL20
TECHNICAL DETAILS SEE P.207

Wall arm L350 mm and showerhead 300x300 mm	Hand shower and hook		P1B.V3MH7CLA02	P1B.V3MH7CLB01	P1B.V3MH7CLD30	P1B.V3MH7CLH49
			P1B.V3MH7CLH50	P1B.V3MH7CLH55	P1B.V3MH7CLH56	P1B.V3MH7CLH67
	Hand shower and shelf 300x100 mm		P1B.V3MH7TLA02	P1B.V3MH7TLB01	P1B.V3MH7TLD30	P1B.V3MH7TLH49
			P1B.V3MH7TLH50	P1B.V3MH7TLH55	P1B.V3MH7TLH56	P1B.V3MH7TLH67
	Hand shower on rail L800 mm, centre distance 785 mm		P1B.V3MH7BLA02	P1B.V3MH7BLB01	P1B.V3MH7BLD30	P1B.V3MH7BLH49
			P1B.V3MH7BLH50	P1B.V3MH7BLH55	P1B.V3MH7BLH56	P1B.V3MH7BLH67
Vertical arm L120 mm and showerhead 300x300 mm	Hand shower and hook		P1B.V3MH8CLA02	P1B.V3MH8CLB01	P1B.V3MH8CLD30	P1B.V3MH8CLH49
			P1B.V3MH8CLH50	P1B.V3MH8CLH55	P1B.V3MH8CLH56	P1B.V3MH8CLH67
	Hand shower and shelf 300x100 mm		P1B.V3MH8TLA02	P1B.V3MH8TLB01	P1B.V3MH8TLD30	P1B.V3MH8TLH49
			P1B.V3MH8TLH50	P1B.V3MH8TLH55	P1B.V3MH8TLH56	P1B.V3MH8TLH67
	Hand shower on rail L800 mm, centre distance 785 mm		P1B.V3MH8BLA02	P1B.V3MH8BLB01	P1B.V3MH8BLD30	P1B.V3MH8BLH49
			P1B.V3MH8BLH50	P1B.V3MH8BLH55	P1B.V3MH8BLH56	P1B.V3MH8BLH67

OPTION

3-JET HAND SHOWER EXTRA-COST

- EASY CLEAN nozzles
- Flowrate: 8L/min at 3bar



P00.OP3JA.A02	P00.OP3JA.B01	P00.OP3JA.D30	P00.OP3JA.H49
P00.OP3JA.H50	P00.OP3JA.H55	P00.OP3JA.H56	P00.OP3JA.H67

OBIONE

3-FUNCTION THERMOSTATIC SHOWER SETS







- Trim for thermostatic mixer with 3 outlets
- Stainless steel sky shower 380x380 mm
- Stainless steel wall-mounted shower water blade or wall-mounted body jets
- Set with single-jet hand shower and holder of your choice

PRODUCT INFORMATION

- Brass
- 130x445 mm plate
- Sky shower with EASY CLEAN nozzles Flowrate: 14.5L/min at 3bar
- Wall-mounted shower water blade flowrate: 17L/min at 3bar
- Wall-mounted body jets with EASY CLEAN nozzles Flowrate: 4L/min at 3bar
- 1.5 m Soft Touch silicone hose
- Brass single-jet hand shower with EASY CLEAN nozzles Flowrate: 8L/min at 3bar

Model shown ref. P1B.V3MH10CL.H50

PLEASE NOTE: FOR PACKS ORDERED IN FINISHES A02 AND B01, THE SKYSHOWER AND WATER BLADE WILL BE DELIVERED IN A POLISHED STAINLESS STEEL FINISH.



TO ORDER WITH ROUGH PART:
P00.THMV3H
TECHNICAL DETAILS SEE P.203



EXTENSION AVAILABLE:
P00.THAL20
TECHNICAL DETAILS SEE P.207



Stainless steel wall-mounted water blade, 300x145 mm

Hand shower and hook		P1B.V3MH10CL.A02 · P1B.V3MH10CL.B01 · P1B.V3MH10CL.D30 · P1B.V3MH10CL.H49 · P1B.V3MH10CL.H50 · P1B.V3MH10CL.H55 · P1B.V3MH10CL.H56 · P1B.V3MH10CL.H67
Hand shower and shelf 300x100 mm		P1B.V3MH10TL.A02 · P1B.V3MH10TL.B01 · P1B.V3MH10TL.D30 · P1B.V3MH10TL.H49 · P1B.V3MH10TL.H50 · P1B.V3MH10TL.H55 · P1B.V3MH10TL.H56 · P1B.V3MH10TL.H67
Hand shower on rail L800 mm, centre distance 785 mm		P1B.V3MH10BL.A02 · P1B.V3MH10BL.B01 · P1B.V3MH10BL.D30 · P1B.V3MH10BL.H49 · P1B.V3MH10BL.H50 · P1B.V3MH10BL.H55 · P1B.V3MH10BL.H56 · P1B.V3MH10BL.H67



6 square built-in side jets, 89x89 mm

Hand shower and hook		P1B.V3MH10CK.A02 · P1B.V3MH10CK.B01 · P1B.V3MH10CK.D30 · P1B.V3MH10CK.H49 · P1B.V3MH10CK.H50 · P1B.V3MH10CK.H55 · P1B.V3MH10CK.H56 · P1B.V3MH10CK.H67
Hand shower and shelf 300x100 mm		P1B.V3MH10TK.A02 · P1B.V3MH10TK.B01 · P1B.V3MH10TK.D30 · P1B.V3MH10TK.H49 · P1B.V3MH10TK.H50 · P1B.V3MH10TK.H55 · P1B.V3MH10TK.H56 · P1B.V3MH10TK.H67
Hand shower on rail L800 mm, centre distance 785 mm		P1B.V3MH10BK.A02 · P1B.V3MH10BK.B01 · P1B.V3MH10BK.D30 · P1B.V3MH10BK.H49 · P1B.V3MH10BK.H50 · P1B.V3MH10BK.H55 · P1B.V3MH10BK.H56 · P1B.V3MH10BK.H67

OPTION

3-JET HAND SHOWER EXTRA-COST

- EASY CLEAN nozzles
- Flowrate: 8L/min at 3bar



P00.OP3JA.A02 · P00.OP3JA.B01 · P00.OP3JA.D30 · P00.OP3JA.H49 · P00.OP3JA.H50 · P00.OP3JA.H55 · P00.OP3JA.H56 · P00.OP3JA.H67

3-FUNCTION THERMOSTATIC SHOWER SETS



- Trim for thermostatic mixer with 3 outlets
- Stainless steel sky shower 380x380 mm with central jet
- Set with single-jet hand shower and holder of your choice

PRODUCT INFORMATION

- Brass
- 130x445 mm plate
- Sky shower with EASY CLEAN nozzles
  Sky shower flowrate: 14.5L/min at 3bar
  Central jet flowrate: 20L/min at 3bar
- 1.5 m Soft Touch silicone hose
- Brass single-jet hand shower with EASY CLEAN nozzles
  Flowrate: 8L/min at 3bar

Model shown ref. P1B.V3MH11C.H50

PLEASE NOTE: FOR PACKS ORDERED IN FINISHES A02 AND B01, THE SKYSHOWER WILL BE DELIVERED IN A POLISHED STAINLESS STEEL FINISH.





TO ORDER WITH ROUGH PART:

P00.THMV3H

TECHNICAL DETAILS SEE P.203



EXTENSION AVAILABLE:

P00.THAL20

TECHNICAL DETAILS SEE P.207



Skyshower 380x380 mm with central jet

Hand shower and hook		P1B.V3MH11C.A02	P1B.V3MH11C.B01	P1B.V3MH11C.D30	P1B.V3MH11C.H49
		P1B.V3MH11C.H50	P1B.V3MH11C.H55	P1B.V3MH11C.H56	P1B.V3MH11C.H67
Hand shower and shelf 300x100 mm		P1B.V3MH11T.A02	P1B.V3MH11T.B01	P1B.V3MH11T.D30	P1B.V3MH11T.H49
		P1B.V3MH11T.H50	P1B.V3MH11T.H55	P1B.V3MH11T.H56	P1B.V3MH11T.H67
Hand shower on rail L800 mm, centre distance 785 mm		P1B.V3MH11B.A02	P1B.V3MH11B.B01	P1B.V3MH11B.D30	P1B.V3MH11B.H49
		P1B.V3MH11B.H50	P1B.V3MH11B.H55	P1B.V3MH11B.H56	P1B.V3MH11B.H67

OPTION

3-JET HAND SHOWER EXTRA-COST

- EASY CLEAN nozzles
- Flowrate: 8L/min at 3bar



P00.OP3JA.A02	P00.OP3JA.B01	P00.OP3JA.D30	P00.OP3JA.H49
P00.OP3JA.H50	P00.OP3JA.H55	P00.OP3JA.H56	P00.OP3JA.H67

3-FUNCTION THERMOSTATIC SHOWER SETS







- Trim for thermostatic mixer with 3 outlets
- Stainless steel sky shower Ø380 mm with stainless steel wall-mounted shower water blade or wall-mounted body jets, or only stainless steel sky shower 380x380 mm with central jet
- Plate-mounted single-jet hand shower

PRODUCT INFORMATION

- Brass
- 550x130 mm plate
- Sky shower with EASY CLEAN nozzles
  Flowrate: 14.5L/min at 3bar
- Wall-mounted shower water blade flowrate: 17L/min at 3bar
- Wall-mounted body jets with EASY CLEAN nozzles
  Flowrate: 4L/min at 3bar
- Sky shower with EASY CLEAN nozzles
  Sky shower flowrate: 14.5L/min at 3bar
  Central jet flowrate: 20L/min at 3bar
- 1.5 m Soft Touch silicone hose
- Brass single-jet hand shower with EASY CLEAN nozzles
  Flowrate: 8L/min at 3bar

Model shown ref. P1B.V3MRX10L.H50

PLEASE NOTE: FOR PACKS ORDERED IN FINISHES A02 AND B01, THE SKYSHOWERS AND WATER BLADES WILL BE DELIVERED IN A POLISHED STAINLESS STEEL FINISH.



TO ORDER WITH ROUGH PART:

P00.THMV3RX1

TECHNICAL DETAILS SEE P.207



EXTENSION AVAILABLE:

P00.THAL20

TECHNICAL DETAILS SEE P.207

	Stainless steel wall-mounted water blade, 300x145 mm		P1B.V3MRX10L.A02	P1B.V3MRX10L.B01	P1B.V3MRX10L.D30	P1B.V3MRX10L.H49
			P1B.V3MRX10L.H50	P1B.V3MRX10L.H55	P1B.V3MRX10L.H56	P1B.V3MRX10L.H67
Skyshower 380x380 mm	6 square built-in side jets, 89x89 mm		P1B.V3MRX10K.A02	P1B.V3MRX10K.B01	P1B.V3MRX10K.D30	P1B.V3MRX10K.H49
			P1B.V3MRX10K.H50	P1B.V3MRX10K.H55	P1B.V3MRX10K.H56	P1B.V3MRX10K.H67
	Skyshower 380x380 mm with central jet		P1B.V3MRX11.A02	P1B.V3MRX11.B01	P1B.V3MRX11.D30	P1B.V3MRX11.H49
			P1B.V3MRX11.H50	P1B.V3MRX11.H55	P1B.V3MRX11.H56	P1B.V3MRX11.H67

OPTION

3-JET HAND SHOWER EXTRA-COST

- EASY CLEAN nozzles
- Flowrate: 8L/min at 3bar



P00.OP3JA.A02	P00.OP3JA.B01	P00.OP3JA.D30	P00.OP3JA.H49
P00.OP3JA.H50	P00.OP3JA.H55	P00.OP3JA.H56	P00.OP3JA.H67

3-FUNCTION THERMOSTATIC SHOWER SETS







- Trim for thermostatic mixer with 3 outlets and **PUSH** controls
- Stainless steel sky shower Ø380 mm with stainless steel wall-mounted shower water blade or wall-mounted body jets, or only stainless steel sky shower 380x380 mm with central jet
- Plate-mounted single-jet hand shower

PRODUCT INFORMATION

- Brass
- 470x130 mm plate
- Sky shower with EASY CLEAN nozzles
  Flowrate: 14.5L/min at 3bar
- Wall-mounted shower water blade flowrate: 17L/min at 3bar
- Wall-mounted body jets with EASY CLEAN nozzles
  Flowrate: 4L/min at 3bar
- Sky shower with EASY CLEAN nozzles
  Sky shower flowrate: 14.5L/min at 3bar
  Central jet flowrate: 20L/min at 3bar
- 1.5 m Soft Touch silicone hose
- Brass single-jet hand shower with EASY CLEAN nozzles
  Flowrate: 8L/min at 3bar

Model shown ref. P1B.P3MRX10L.H50

PLEASE NOTE: FOR PACKS ORDERED IN FINISHES A02 AND B01, THE SKYSHOWERS AND WATER BLADES WILL BE DELIVERED IN A POLISHED STAINLESS STEEL FINISH.



TO ORDER WITH ROUGH PART:

P00.THMP3RX1

TECHNICAL DETAILS SEE P.204



EXTENSION AVAILABLE:

P00.THAL20

TECHNICAL DETAILS SEE P.207

	Stainless steel wall-mounted water blade, 300x145 mm		P1B.P3MRX10L.A02	P1B.P3MRX10L.B01	P1B.P3MRX10L.D30	P1B.P3MRX10L.H49
			P1B.P3MRX10L.H50	P1B.P3MRX10L.H55	P1B.P3MRX10L.H56	P1B.P3MRX10L.H67
Skyshower 380x380 mm	6 square built-in side jets, 89x89 mm		P1B.P3MRX10K.A02	P1B.P3MRX10K.B01	P1B.P3MRX10K.D30	P1B.P3MRX10K.H49
			P1B.P3MRX10K.H50	P1B.P3MRX10K.H55	P1B.P3MRX10K.H56	P1B.P3MRX10K.H67
	Skyshower 380x380 mm with central jet		P1B.P3MRX11.A02	P1B.P3MRX11.B01	P1B.P3MRX11.D30	P1B.P3MRX11.H49
			P1B.P3MRX11.H50	P1B.P3MRX11.H55	P1B.P3MRX11.H56	P1B.P3MRX11.H67

OPTION

3-JET HAND SHOWER EXTRA-COST

- EASY CLEAN nozzles
- Flowrate: 8L/min at 3bar



P00.OP3JA.A02	P00.OP3JA.B01	P00.OP3JA.D30	P00.OP3JA.H49
P00.OP3JA.H50	P00.OP3JA.H55	P00.OP3JA.H56	P00.OP3JA.H67

OBIONE

SHOWER DRAINS

Drains for walk-in showers and masonry showers, bottom outlet



FULL COVER GRID



TILE-READY COVER GRID



DECOR COVER GRID

☐ 100 mm

INSTRUCTION MANUAL

P00.763B100C50
- Flowrate: 30L/min

P00.763B100C50.A08
P00.763B100C50.A09
P00.763B100C50.D30
P00.763B100C51.H49
P00.763B100C50.H50
P00.763B100C50.H55
P00.763B100C50.H56
P00.763B100C50.H67

☐ 125 mm

INSTRUCTION MANUAL

P00.763B125A50
- Flowrate: 20L/min

P00.763B125A50.A08
P00.763B125A50.A09
P00.763B125A50.D30
P00.763B125A50.H49
P00.763B125A50.H50
P00.763B125A50.H55
P00.763B125A50.H56
P00.763B125A50.H67

P00.763B125B50
- Flowrate: 20L/min

P00.763B125B50.A08
P00.763B125B50.A09
P00.763B125B50.D30
P00.763B125B50.H49
P00.763B125B50.H50
P00.763B125B50.H55
P00.763B125B50.H56
P00.763B125B50.H67

P00.763B125C50
- Flowrate: 30L/min

P00.763B125C50.A08
P00.763B125C50.A09
P00.763B125C50.D30
P00.763B125C50.H49
P00.763B125C50.H50
P00.763B125C50.H55
P00.763B125C50.H56
P00.763B125C50.H67

☐ 150 mm

INSTRUCTION MANUAL

P00.763B150A50
- Flowrate: 30L/min

P00.763B150A50.A08
P00.763B150A50.A09
P00.763B150A50.D30
P00.763B150A50.H49
P00.763B150A50.H50
P00.763B150A50.H55
P00.763B150A50.H56
P00.763B150A50.H67

P00.763B150B50
- Flowrate: 30L/min

P00.763B150B50.A08
P00.763B150B50.A09
P00.763B150B50.D30
P00.763B150B50.H49
P00.763B150B50.H50
P00.763B150B50.H55
P00.763B150B50.H56
P00.763B150B50.H67

P00.763B150C50
- Flowrate: 30L/min

P00.763B150C50.A08
P00.763B150C50.A09
P00.763B150C50.D30
P00.763B150C50.H49
P00.763B150C50.H50
P00.763B150C50.H55
P00.763B150C50.H56
P00.763B150C50.H67

OBIONE

SHOWER DRAINS

Drains for walk-in showers and masonry showers, side outlet



FULL COVER GRID



TILE-READY COVER GRID



DECOR COVER GRID

☐ 100 mm

INSTRUCTION MANUAL

P00.764S100C50
- Flowrate: 35L/min

P00.764S100C50.A08
P00.764S100C50.A09
P00.764S100C50.D30
P00.764S100C50.H49
P00.764S100C50.H50
P00.764S100C50.H55
P00.764S100C50.H56
P00.764S100C50.H67

☐ 125 mm

INSTRUCTION MANUAL

P00.764S125A50
- Flowrate: 30L/min

P00.764S125A50.A08
P00.764S125A50.A09
P00.764S125A50.D30
P00.764S125A50.H49
P00.764S125A50.H50
P00.764S125A50.H55
P00.764S125A50.H56
P00.764S125A50.H67

P00.764S125B50
- Flowrate: 30L/min

P00.764S125B50.A08
P00.764S125B50.A09
P00.764S125B50.D30
P00.764S125B50.H49
P00.764S125B50.H50
P00.764S125B50.H55
P00.764S125B50.H56
P00.764S125B50.H67

P00.764S125C50
- Flowrate: 35L/min

P00.764S125C50.A08
P00.764S125C50.A09
P00.764S125C50.D30
P00.764S125C50.H49
P00.764S125C50.H50
P00.764S125C50.H55
P00.764S125C50.H56
P00.764S125C50.H67

☐ 150 mm

INSTRUCTION MANUAL

P00.764S150A50
- Flowrate: 40L/min

P00.764S150A50.A08
P00.764S150A50.A09
P00.764S150A50.D30
P00.764S150A50.H49
P00.764S150A50.H50
P00.764S150A50.H55
P00.764S150A50.H56
P00.764S150A50.H67

P00.764S150B50
- Flowrate: 40L/min

P00.764S150B50.A08
P00.764S150B50.A09
P00.764S150B50.D30
P00.764S150B50.H49
P00.764S150B50.H50
P00.764S150B50.H55
P00.764S150B50.H56
P00.764S150B50.H67

P00.764S150C50
- Flowrate: 40L/min

P00.764S150C50.A08
P00.764S150C50.A09
P00.764S150C50.D30
P00.764S150C50.H49
P00.764S150C50.H50
P00.764S150C50.H55
P00.764S150C50.H56
P00.764S150C50.H67



SHOWER DRAINS

Linear drains for walk-in showers and masonry showers, side outlet

- **Flowrate: 45L/min**





	FULL COVER GRID	TILE-READY COVER GRID
700 mm	P00.7625700A50.A08 P00.7625700A50.A09 P00.7625700A50.D30 P00.7625700A50.H49 P00.7625700A50.H50 P00.7625700A50.H55 P00.7625700A50.H56 P00.7625700A50.H67	P00.7625700B50.A00
800 mm	P00.7625800A50.A08 P00.7625800A50.A09 P00.7625800A50.D30 P00.7625800A50.H49 P00.7625800A50.H50 P00.7625800A50.H55 P00.7625800A50.H56 P00.7625800A50.H67	P00.7625800B50.A00
900 mm	P00.7625900A50.A08 P00.7625900A50.A09 P00.7625900A50.D30 P00.7625900A50.H49 P00.7625900A50.H50 P00.7625900A50.H55 P00.7625900A50.H56 P00.7625900A50.H67	P00.7625900B50.A00

INSTRUCTION MANUAL

BIDET & TOILET



P1B.6504

Single lever bidet mixer with waste

- Brass
- Supplied with 1¼″ click waste
- Cold start and EASY FIX system
- Overall height: 187 mm - Maximum spout projection: 114 mm
- Flowrate: 8.4L/min at 3bar

P1B.6504.A02 P1B.6504.B01 P1B.6504.D30 P1B.6504.H49
P1B.6504.H50 P1B.6504.H55 P1B.6504.H56 P1B.6504.H67



P1B.5840/11

WC douche set including: trigger spray, hose and wall outlet with stop lever

- Brass
- 1.25 m Soft Touch silicone hose
- Flowrate: 8L/min at 3bar

P1B.5840/11.A02 P1B.5840/11.B01 P1B.5840/11.D30 P1B.5840/11.H49
P1B.5840/11.H50 P1B.5840/11.H55 P1B.5840/11.H56 P1B.5840/11.H67



P1B.5840SPB

Trim for WC douche including: trigger spray, wall mounted single lever mixer, hose, wall outlet with integrated elbow with safety stopper

- Brass
- Ceramic cartridge
- 1.25 m Soft Touch silicone hose
- Flowrate: 8L/min at 3bar



TO ORDER WITH ROUGH PART:

P00.6541SPA

TECHNICAL DETAILS SEE P.200

P1B.5840SPB.A02 P1B.5840SPB.B01 P1B.5840SPB.D30 P1B.5840SPB.H49
P1B.5840SPB.H50 P1B.5840SPB.H55 P1B.5840SPB.H56 P1B.5840SPB.H67

ACCESSORIES



P1B.538A

Wall mounted WC paper holder without cover

- **Width: 170 mm**

P1B.538A.A02 P1B.538A.B01 P1B.538A.D30 P1B.538A.H49
P1B.538A.H50 P1B.538A.H55 P1B.538A.H56 P1B.538A.H67



P1B.538TAB

Wall mounted WC paper holder with shelf

- **SECURIT glass, 10 mm thick**
- **Width: 200 mm**
- **Depth: 127 mm**

P1B.538TAB.A02 P1B.538TAB.B01 P1B.538TAB.D30 P1B.538TAB.H49
P1B.538TAB.H50 P1B.538TAB.H55 P1B.538TAB.H56 P1B.538TAB.H67



P1B.542

Wall mounted WC reserve paper holder

- **Height: 170 mm**

P1B.542.A02 P1B.542.B01 P1B.542.D30 P1B.542.H49
P1B.542.H50 P1B.542.H55 P1B.542.H56 P1B.542.H67



P1B.4720C

Wall mounted WC brush with cover and holder

- **Height: 398 mm**
- **WC brush holder Ø82 mm**

P1B.4720C.A02 P1B.4720C.B01 P1B.4720C.D30 P1B.4720C.H49
P1B.4720C.H50 P1B.4720C.H55 P1B.4720C.H56 P1B.4720C.H67



ACCESSORIES



P1B.613M
Wall mounted liquid soap dispenser, with lever control

- **Height: 148 mm**

P1B.613M.A02 P1B.613M.B01 P1B.613M.D30 P1B.613M.H49
P1B.613M.H50 P1B.613M.H55 P1B.613M.H56 P1B.613M.H67



P1B.613PC
Liquid soap dispenser

- **Height: 186 mm**

P1B.613PC.A02 P1B.613PC.B01 P1B.613PC.D30 P1B.613PC.H49
P1B.613PC.H50 P1B.613PC.H55 P1B.613PC.H56 P1B.613PC.H67



P1B.536
Wall mounted glass tumbler and holder

- **Height: 112 mm**

P1B.536.A02 P1B.536.B01 P1B.536.D30 P1B.536.H49
P1B.536.H50 P1B.536.H55 P1B.536.H56 P1B.536.H67



P1B.536PC
Tumbler and holder on stand

- **Height: 98 mm**

P1B.536PC.A02 P1B.536PC.B01 P1B.536PC.D30 P1B.536PC.H49
P1B.536PC.H50 P1B.536PC.H55 P1B.536PC.H56 P1B.536PC.H67

ACCESSORIES



P1B.500

Wall mounted glass soap dish

- **Soap dish: 156x77 mm**

P1B.500.A02 P1B.500.B01 P1B.500.D30 P1B.500.H49
P1B.500.H50 P1B.500.H55 P1B.500.H56 P1B.500.H67



P1B.500PC

Soap dish on stand

- **Soap dish: 156x77 mm**

P1B.500PC.A02 P1B.500PC.B01 P1B.500PC.D30 P1B.500PC.H49
P1B.500PC.H50 P1B.500PC.H55 P1B.500PC.H56 P1B.500PC.H67



P1B.500TAB

Wall-mounted shelf with glass soap dish

- **236x81 mm**
- **Soap dish: 156x77 mm**

P1B.500TAB.A02 P1B.500TAB.B01 P1B.500TAB.D30 P1B.500TAB.H49
P1B.500TAB.H50 P1B.500TAB.H55 P1B.500TAB.H56 P1B.500TAB.H67



P1B.504P

Single towel ring

- **192x142 mm**

P1B.504P.A02 P1B.504P.B01 P1B.504P.D30 P1B.504P.H49
P1B.504P.H50 P1B.504P.H55 P1B.504P.H56 P1B.504P.H67

ACCESSORIES



P1B.514/60

Single towel rail, fixed rail, large model

- **600 mm centres**

P1B.514/60.A02 P1B.514/60.B01 P1B.514/60.D30 P1B.514/60.H49
P1B.514/60.H50 P1B.514/60.H55 P1B.514/60.H56 P1B.514/60.H67



P1B.514/30

Single towel rail, fixed rail, medium model

- **300 mm centres**

P1B.514/30.A02 P1B.514/30.B01 P1B.514/30.D30 P1B.514/30.H49
P1B.514/30.H50 P1B.514/30.H55 P1B.514/30.H56 P1B.514/30.H67



P1B.517

Single robe hook

- **Length: 36 mm**

P1B.517.A02 P1B.517.B01 P1B.517.D30 P1B.517.H49
P1B.517.H50 P1B.517.H55 P1B.517.H56 P1B.517.H67



P1B.564

Glass shelf with supports, large model

- **SECURIT glass, 10 mm thick**
- **Length: 600 mm**
- **Depth: 138 mm**

P1B.564.A02 P1B.564.B01 P1B.564.D30 P1B.564.H49
P1B.564.H50 P1B.564.H55 P1B.564.H56 P1B.564.H67



P1B.564/45

Glass shelf with supports, medium model

- **SECURIT glass, 10 mm thick**
- **Length: 450 mm**
- **Depth: 118 mm**

P1B.564/45.A02 P1B.564/45.B01 P1B.564/45.D30 P1B.564/45.H49
P1B.564/45.H50 P1B.564/45.H55 P1B.564/45.H56 P1B.564/45.H67





Collection presented in MATT NICKEL PVD finish (H56)

OYAT

Shaped by the wind across coastal dunes, Oyat arouses slender, fluid lines. Its design conveys a sense of lightness, the freedom of the shoreline and the natural elegance of movement.

OYAT





BASIN



P1A.152

Rim mounted 3-hole basin mixer with waste, high spout

- Low-lead brass
- Supplied with 1¼″ click waste
- Overall height: 262 mm - Maximum spout projection: 160 mm
- Flowrate: 8.4L/min at 3bar

P1A.152.A02 P1A.152.B01 P1A.152.D30 P1A.152.H49
P1A.152.H50 P1A.152.H55 P1A.152.H56 P1A.152.H67



P1A.6500

Single lever basin mixer with waste

- Low-lead brass
- Supplied with 1¼″ click waste
- COLD START ceramic cartridge with temperature stop and EASY FIX system
- Overall height: 185 mm - Maximum spout projection: 131 mm
- Flowrate: 8.4L/min at 3bar

P1A.6500.A02 P1A.6500.B01 P1A.6500.D30 P1A.6500.H49
P1A.6500.H50 P1A.6500.H55 P1A.6500.H56 P1A.6500.H67

P1A.6500SV

Single lever basin mixer without waste

- FEATURES: SEE ABOVE



P1A.6500SV.A02 P1A.6500SV.B01 P1A.6500SV.D30 P1A.6500SV.H49
P1A.6500SV.H50 P1A.6500SV.H55 P1A.6500SV.H56 P1A.6500SV.H67



P1A.6500D

Single lever basin mixer with waste, medium size

- Low-lead brass
- Supplied with 1¼″ click waste
- COLD START ceramic cartridge with temperature stop and EASY FIX system
- Overall height: 275 mm - Maximum spout projection: 151 mm
- Flowrate: 8.4L/min at 3bar

P1A.6500D.A02 P1A.6500D.B01 P1A.6500D.D30 P1A.6500D.H49
P1A.6500D.H50 P1A.6500D.H55 P1A.6500D.H56 P1A.6500D.H67

P1A.6500DSV

Single lever basin mixer without waste, medium size

- FEATURES: SEE ABOVE



P1A.6500DSV.A02 P1A.6500DSV.B01 P1A.6500DSV.D30 P1A.6500DSV.H49
P1A.6500DSV.H50 P1A.6500DSV.H55 P1A.6500DSV.H56 P1A.6500DSV.H67





P1A.6500H

Single lever basin mixer with waste, high model

- **Low-lead brass**
- **Supplied with 1¼″ click waste**
- **COLD START ceramic cartridge with temperature stop and EASY FIX system**
- **Overall height: 333 mm - Maximum spout projection: 151 mm**
- **FLowrate: 8.4L/min at 3bar**

P1A.6500H.A02 P1A.6500H.B01 P1A.6500H.D30 P1A.6500H.H49
P1A.6500H.H50 P1A.6500H.H55 P1A.6500H.H56 P1A.6500H.H67

P1A.6500HSV

Single lever basin mixer without waste, high model

- **FEATURES: SEE ABOVE**



P1A.6500HSV.A02 P1A.6500HSV.B01 P1A.6500HSV.D30 P1A.6500HSV.H49
P1A.6500HSV.H50 P1A.6500HSV.H55 P1A.6500HSV.H56 P1A.6500HSV.H67

BASIN



P1A.40GB

Trim only for wall mounted 3-hole basin mixer, without waste

- Low-lead brass
- Maximum spout projection: 180 mm
- Flowrate: 8.4L/min at 3bar





TO ORDER WITH ROUGH PART:

P00.40AC

TECHNICAL DETAILS SEE P.200

P1A.40GB.A02 P1A.40GB.B01 P1A.40GB.D30 P1A.40GB.H49
P1A.40GB.H50 P1A.40GB.H55 P1A.40GB.H56 P1A.40GB.H67



P1A.40SGB

Trim only for wall mounted 3-hole basin mixer, long spout, without waste

- Low-lead brass
- Maximum spout projection: 230 mm
- Flowrate: 8.4L/min at 3bar





TO ORDER WITH ROUGH PART:

P00.40AC

TECHNICAL DETAILS SEE P.200

P1A.40SGB.A02 P1A.40SGB.B01 P1A.40SGB.D30 P1A.40SGB.H49
P1A.40SGB.H50 P1A.40SGB.H55 P1A.40SGB.H56 P1A.40SGB.H67



P1A.6541SPB

Trim for wall-mounted built-in basin mixer with spout, without waste

- Low-lead brass
- Ceramic cartridge with temperature stop
- Maximum spout projection: 180 mm
- Flowrate: 8.4L/min at 3bar





TO ORDER WITH ROUGH PART:

P00.6541SPA

TECHNICAL DETAILS SEE P.200

P1A.6541SPB.A02 P1A.6541SPB.B01 P1A.6541SPB.D30 P1A.6541SPB.H49
P1A.6541SPB.H50 P1A.6541SPB.H55 P1A.6541SPB.H56 P1A.6541SPB.H67



P1A.6541SPBL

Trim for wall-mounted built-in basin mixer with long spout, without waste

- Low-lead brass
- Ceramic cartridge with temperature stop
- Maximum spout projection: 230 mm
- Flowrate: 8.4L/min at 3bar





TO ORDER WITH ROUGH PART:

P00.6541SPA

TECHNICAL DETAILS SEE P.200

P1A.6541SPBL.A02 P1A.6541SPBL.B01 P1A.6541SPBL.D30 P1A.6541SPBL.H49
P1A.6541SPBL.H50 P1A.6541SPBL.H55 P1A.6541SPBL.H56 P1A.6541SPBL.H67

BASIN WASTE



P00.316KB

Click waste, supplied with locking kit for free-flowing basin

- Brass
- 1¼" connection

P00.316KB.A02 P00.316KB.B01 P00.316KB.D30 P00.316KB.H49
P00.316KB.H50 P00.316KB.H55 P00.316KB.H56 P00.316KB.H67



P00.309SP

Bottle trap only for waste

- Brass
- Height: min. 80 mm - max. 176 mm
- Length 326 mm
- Tube Ø32 mm

P00.309SP.A02 P00.309SP.B01 P00.309SP.D30 P00.309SP.H49
P00.309SP.H50 P00.309SP.H55 P00.309SP.H56 P00.309SP.H57



P00.308TP

Adjustable bottle trap

- Brass
- Height: min. 85 mm - max. 130 mm
- Length 326 mm
- Tube Ø32 mm

P00.308TP.A02 P00.308TP.B01 P00.308TP.D30 P00.308TP.H49
P00.308TP.H50 P00.308TP.H55 P00.308TP.H56 P00.308TP.H57



P00.315LP

Adjustable "P" trap

- Brass
- Height: min. 140 mm - max. 196 mm
- Length 267 mm
- Tube Ø32 mm

P00.315LP.A02 P00.315LP.B01 P00.315LP.D30 P00.315LP.H49
P00.315LP.H50 P00.315LP.H55 P00.315LP.H56 P00.315LP.H57

BATH



P1A.112BSGBH

Bath/shower mixer, diverter to high spout and hand shower

- Brass
- Spout: Overall height 352 mm
  Maximum spout projection: 225 mm
  Flowrate: 35L/min at 3bar
- 1.5 m Soft Touch silicone hose
- Brass single-jet hand shower with EASY CLEAN nozzles
  Flowrate: 8L/min at 3bar



TO ORDER OPTIONAL:

P00.5598
Hose reservoir
TECHNICAL DETAILS SEE P.207

P1A.112BSGBH.A02 P1A.112BSGBH.B01 P1A.112BSGBH.D30 P1A.112BSGBH.H49
P1A.112BSGBH.H50 P1A.112BSGBH.H55 P1A.112BSGBH.H56 P1A.112BSGBH.H67



P1A.1132SGH

Bath mixer with high spout, and hand shower supplied by progressive cartridge mix

- Brass
- Spout: Overall height 316 mm
  Maximum spout projection: 215 mm
  Flowrate: 35L/min at 3bar
- 1.5 m Soft Touch silicone hose
- Brass single-jet hand shower with EASY CLEAN nozzles
  Flowrate: 8L/min at 3bar
- Manual mixing valve



TO ORDER OPTIONAL:

P00.5598
Hose reservoir
TECHNICAL DETAILS SEE P.207

P1A.11329GH.A02 P1A.11329GH.B01 P1A.11329GH.D30 P1A.11329GH.H49
P1A.11329GH.H50 P1A.11329GH.H55 P1A.11329GH.H56 P1A.11329GH.H67



P1A.6518SB

Free-standing bath mixer with hand shower, without mounting plate

- Brass
- Free-standing spout:
  Spout outlet height: 771 mm
  Maximum spout projection: 177 mm
  Flowrate: 25L/min at 3bar
- 1.5 m Soft Touch silicone hose
- Brass single-jet hand shower with EASY CLEAN nozzles
  Flowrate: 8L/min at 3bar
- Manual mixing valve



TO ORDER WITH BUILT-IN FIXING PLATE:

P00.6518SA
TECHNICAL DETAILS SEE P.201

P1A.6518SB.A02 P1A.6518SB.B01 P1A.6518SB.D30 P1A.6518SB.H49
P1A.6518SB.H50 P1A.6518SB.H55 P1A.6518SB.H56 P1A.6518SB.H67





THERMOSTATIC BATH



P1A.6510BC

Thermostatic bath shower mixer with hook, hose and hand shower

- Brass
- Thermostatic control with temperature stop 38°C, max. 50°C
- Anti-scald safety THERMO COOL CONTACT
- 150 mm centres
- Maximum spout projection: 183 mm
  Flowrate: 20L/min at 3bar
- 1.5 m Soft Touch silicone hose
- Brass single-jet hand shower
  with EASY CLEAN nozzles
  Flowrate: 8L/min at 3bar

P1A.6510BC.A02 P1A.6510BC.B01 P1A.6510BC.D30 P1A.6510BC.H49
P1A.6510BC.H50 P1A.6510BC.H55 P1A.6510BC.H56 P1A.6510BC.H67



P1A.6510BB

Thermostatic bath shower mixer with sliding bar, hose and hand shower

- Brass
- Thermostatic control with temperature stop 38°C, max. 50°C
- Anti-scald safety THERMO COOL CONTACT
- 150 mm centres
- Maximum spout projection: 183 mm
  Flowrate: 20L/min at 3bar
- 1.5 m Soft Touch silicone hose
- Brass single-jet hand shower
  with EASY CLEAN nozzles
  Flowrate: 8L/min at 3bar
- Slidebar height: 670 mm, 600 mm centres

P1A.6510BB.A02 P1A.6510BB.B01 P1A.6510BB.D30 P1A.6510BB.H49
P1A.6510BB.H50 P1A.6510BB.H55 P1A.6510BB.H56 P1A.6510BB.H67

OPTION

3-JET HAND SHOWER EXTRA-COST

- EASY CLEAN nozzles
- Flowrate: 8L/min at 3bar



P00.OP3JA.A02 P00.OP3JA.B01 P00.OP3JA.D30 P00.OP3JA.H49
P00.OP3JA.H50 P00.OP3JA.H55 P00.OP3JA.H56 P00.OP3JA.H67

2-FUNCTION BATH SETS



- Trim only for manual mixing valve
- Automatic diverter
- Bathtub spout
- Set with single-jet hand shower and holder of your choice



TO ORDER WITH ROUGH PART:

P00.6550SPA

TECHNICAL DETAILS SEE P.201

PRODUCT INFORMATION

- Brass
- Maximum spout projection: 180 mm
  Flowrate: 25L/min at 3bar
- 1.5 m Soft Touch silicone hose
- Brass single-jet hand shower with EASY CLEAN nozzles
  Flowrate: 8L/min at 3bar

Model shown ref. P1A.6550RCS.H56

Hand shower and hook



P1A.6550RCS.A02 P1A.6550RCS.B01 P1A.6550RCS.D30 P1A.6550RCS.H49
P1A.6550RCS.H50 P1A.6550RCS.H55 P1A.6550RCS.H56 P1A.6550RCS.H67

Hand shower on rail
L 670 mm, centre distance 600 mm



P1A.6550RBS.A02 P1A.6550RBS.B01 P1A.6550RBS.D30 P1A.6550RBS.H49
P1A.6550RBS.H50 P1A.6550RBS.H55 P1A.6550RBS.H56 P1A.6550RBS.H67



- Trim only for wall-mounted 3-hole bath mixer
- Trim only for manual mixing valve
- Set with single-jet hand shower and holder of your choice



TO ORDER WITH ROUGH PART:

P00.40DMAC

TECHNICAL DETAILS SEE P.202

PRODUCT INFORMATION

- Brass
- Maximum spout projection: 180 mm
  Flowrate: 35L/min at 3bar
- 1.5 m Soft Touch silicone hose
- Brass single-jet hand shower with EASY CLEAN nozzles
  Flowrate: 8L/min at 3bar

Model shown ref. P1A.41G6561.H56

Hand shower and hook



P1A.41G6561.A02 P1A.41G6561.B01 P1A.41G6561.D30 P1A.41G6561.H49
P1A.41G6561.H50 P1A.41G6561.H55 P1A.41G6561.H56 P1A.41G6561.H67

Hand shower on rail
L 670 mm, centre distance 600 mm



P1A.41G6571.A02 P1A.41G6571.B01 P1A.41G6571.D30 P1A.41G6571.H49
P1A.41G6571.H50 P1A.41G6571.H55 P1A.41G6571.H56 P1A.41G6571.H67

OPTION

3-JET HAND SHOWER EXTRA-COST

- EASY CLEAN nozzles
- Flowrate: 8L/min at 3bar



P00.0P3JA.A02 P00.0P3JA.B01 P00.0P3JA.D30 P00.0P3JA.H49
P00.0P3JA.H50 P00.0P3JA.H55 P00.0P3JA.H56 P00.0P3JA.H67

OYAT

THERMOSTATIC 2-FUNCTION BATH SETS



- Trim for thermostatic mixer with 2 outlets
- Plate-mounted bathtub spout and single-jet hand shower
- Interchangeable spout and hand shower positioning

PRODUCT INFORMATION

- **Brass**
- **530x130 mm plate**
- **Maximum spout projection: 180 mm Flowrate: 35L/min à 3bar**
- **1.5 m Soft Touch silicone hose**
- **Brass single-jet hand shower with EASY CLEAN nozzles Flowrate: 8L/min at 3bar**



TO ORDER WITH ROUGH PART:

P00.THMV2X2

TECHNICAL DETAILS SEE P.202



EXTENSION AVAILABLE:

P00.THAL20

TECHNICAL DETAILS SEE P.207

P1A.BTHV2X2.A02 P1A.BTHV2X2.B01 P1A.BTHV2X2.D30 P1A.BTHV2X2.H49

P1A.BTHV2X2.H50 P1A.BTHV2X2.H55 P1A.BTHV2X2.H56 P1A.BTHV2X2.H67



THERMOSTATIC 2-FUNCTION BATH SETS



- Trim for thermostatic mixer with 2 outlets and **PUSH** controls
- Bathtub spout or bath waste with integrated filling system
- Plate-mounted single-jet hand shower

PRODUCT INFORMATION

- Brass
- 380x130 mm plate
- Maximum spout projection: 180 mm
  Flowrate: 35L/min at 3bar
- 1.5 m Soft Touch silicone hose
- Brass single-jet hand shower with EASY CLEAN nozzles
  Flowrate: 8L/min at 3bar

Model shown ref. P1A.P2RDS.H56



TO ORDER WITH ROUGH PART:

P00.THMP2RX1

TECHNICAL DETAILS SEE P.202



EXTENSION AVAILABLE:

P00.THAL20

TECHNICAL DETAILS SEE P.207

Wall spout		P1A.P2RDS.A02	P1A.P2RDS.B01	P1A.P2RDS.D30	P1A.P2RDS.H49
		P1A.P2RDS.H50	P1A.P2RDS.H55	P1A.P2RDS.H56	P1A.P2RDS.H67
Filling system via discharge wheel		P1A.P2RDF.A02	P1A.P2RDF.B01	P1A.P2RDF.D30	P1A.P2RDF.H49
		P1A.P2RDF.H50	P1A.P2RDF.H55	P1A.P2RDF.H56	P1A.P2RDF.H67
Outlet for filling system via discharge wheel	**NOT PROVIDED**	P1A.BTHP2RX1.A02	P1A.BTHP2RX1.B01	P1A.BTHP2RX1.D30	P1A.BTHP2RX1.H49
		P1A.BTHP2RX1.H50	P1A.BTHP2RX1.H55	P1A.BTHP2RX1.H56	P1A.BTHP2RX1.H67

OPTION

3-JET HAND SHOWER EXTRA-COST

- EASY CLEAN nozzles
- Flowrate: 8L/min at 3bar



P00.OP3JA.A02	P00.OP3JA.B01	P00.OP3JA.D30	P00.OP3JA.H49
P00.OP3JA.H50	P00.OP3JA.H55	P00.OP3JA.H56	P00.OP3JA.H67

THERMOSTATIC 3-FUNCTION BATH SETS



- Trim for thermostatic mixer with 3 outlets
- Showerhead Ø300 mm with shower arm of your choice
- Bathtub spout
- Set with single-jet hand shower and holder of your choice

PRODUCT INFORMATION

- Brass
- 445x130 mm plate
- Maximum spout projection: 180 mm
  Flowrate: 35L/min at 3bar
- Brass showerhead with EASY CLEAN nozzles
  Flowrate: 9.5L/min at 3bar
- 1.5 m Soft Touch silicone hose
- Brass single-jet hand shower with EASY CLEAN nozzles
  Flowrate: 8L/min at 3bar

Model shown ref. P1A.V3MH5CS.H56





TO ORDER WITH ROUGH PART:

P00.THMV3R
Left-hand mixer tap
TECHNICAL DETAILS SEE P.203



EXTENSION AVAILABLE:

P00.THAL20
TECHNICAL DETAILS SEE P.207

 Wall arm L450 mm and showerhead Ø300 mm	Hand shower and hook		P1A.V3MH5CS.A02	P1A.V3MH5CS.B01	P1A.V3MH5CS.D30	P1A.V3MH5CS.H49
			P1A.V3MH5CS.H50	P1A.V3MH5CS.H55	P1A.V3MH5CS.H56	P1A.V3MH5CS.H67
	Hand shower on rail L670 mm, centre distance 600 mm		P1A.V3MH5BS.A02	P1A.V3MH5BS.B01	P1A.V3MH5BS.D30	P1A.V3MH5BS.H49
			P1A.V3MH5BS.H50	P1A.V3MH5BS.H55	P1A.V3MH5BS.H56	P1A.V3MH5BS.H67
 Vertical arm L120 mm and showerhead Ø300 mm	Hand shower and hook		P1A.V3MH6CS.A02	P1A.V3MH6CS.B01	P1A.V3MH6CS.D30	P1A.V3MH6CS.H49
			P1A.V3MH6CS.H50	P1A.V3MH6CS.H55	P1A.V3MH6CS.H56	P1A.V3MH6CS.H67
	Hand shower on rail L670 mm, centre distance 600 mm		P1A.V3MH6BS.A02	P1A.V3MH6BS.B01	P1A.V3MH6BS.D30	P1A.V3MH6BS.H49
			P1A.V3MH6BS.H50	P1A.V3MH6BS.H55	P1A.V3MH6BS.H56	P1A.V3MH6BS.H67

OPTION

3-JET HAND SHOWER EXTRA-COST

- EASY CLEAN nozzles
- Flowrate: 8L/min at 3bar



P00.OP3JA.A02	P00.OP3JA.B01	P00.OP3JA.D30	P00.OP3JA.H49
P00.OP3JA.H50	P00.OP3JA.H55	P00.OP3JA.H56	P00.OP3JA.H67

THERMOSTATIC 3-FUNCTION BATH SETS



- Trim for thermostatic mixer with 3 outlets and **PUSH** controls
- Showerhead Ø300 mm with shower arm of your choice
- Bathtub spout or bath waste with integrated filling system
- Plate-mounted single-jet hand shower

PRODUCT INFORMATION

- Brass
- 470x130 mm plate
- Maximum spout projection: 180 mm
  Flowrate: 35L/min at 3bar
- Brass showerhead with EASY CLEAN nozzles
  Flowrate: 9.5L/min at 3bar
- 1.5 m Soft Touch silicone hose
- Brass single-jet hand shower with EASY CLEAN nozzles
  Flowrate: 8L/min at 3bar

Model shown ref. P1A.P3MRX5S.H56





TO ORDER WITH ROUGH PART:

P00.THMP3RX1

TECHNICAL DETAILS SEE P.204



EXTENSION AVAILABLE:

P00.THAL20

TECHNICAL DETAILS SEE P.207

Wall arm L450 mm and showerhead Ø300 mm	Wall spout	P1A.P3MRX5S.A02	P1A.P3MRX5S.B01	P1A.P3MRX5S.D30	P1A.P3MRX5S.H49
		P1A.P3MRX5S.H50	P1A.P3MRX5S.H55	P1A.P3MRX5S.H56	P1A.P3MRX5S.H67
	Filling system via discharge wheel	P1A.P3MRX5F.A02	P1A.P3MRX5F.B01	P1A.P3MRX5F.D30	P1A.P3MRX5F.H49
		P1A.P3MRX5F.H50	P1A.P3MRX5F.H55	P1A.P3MRX5F.H56	P1A.P3MRX5F.H67
	Outlet for filling system via discharge wheel	**NOT PROVIDED**			
		P1A.P3MRX5X.A02	P1A.P3MRX5X.B01	P1A.P3MRX5X.D30	P1A.P3MRX5X.H49
		P1A.P3MRX5X.H50	P1A.P3MRX5X.H55	P1A.P3MRX5X.H56	P1A.P3MRX5X.H67
Vertical arm L120 mm and showerhead Ø300 mm	Wall spout	P1A.P3MRX6S.A02	P1A.P3MRX6S.B01	P1A.P3MRX6S.D30	P1A.P3MRX6S.H49
		P1A.P3MRX6S.H50	P1A.P3MRX6S.H55	P1A.P3MRX6S.H56	P1A.P3MRX6S.H67
	Filling system via discharge wheel	P1A.P3MRX6F.A02	P1A.P3MRX6F.B01	P1A.P3MRX6F.D30	P1A.P3MRX6F.H49
		P1A.P3MRX6F.H50	P1A.P3MRX6F.H55	P1A.P3MRX6F.H56	P1A.P3MRX6F.H67
	Outlet for filling system via discharge wheel	**NOT PROVIDED**			
		P1A.P3MRX6X.A02	P1A.P3MRX6X.B01	P1A.P3MRX6X.D30	P1A.P3MRX6X.H49
		P1A.P3MRX6X.H50	P1A.P3MRX6X.H55	P1A.P3MRX6X.H56	P1A.P3MRX6X.H67

OPTION

3-JET HAND SHOWER EXTRA-COST

- EASY CLEAN nozzles
- Flowrate: 8L/min at 3bar



P00.OP3JA.A02	P00.OP3JA.B01	P00.OP3JA.D30	P00.OP3JA.H49
P00.OP3JA.H50	P00.OP3JA.H55	P00.OP3JA.H56	P00.OP3JA.H67

BATH WASTE



P1A.302

Geberit bath waste, adjustable height: mini 165 mm / maxi 390 mm; adjustable projection: mini 110 mm / maxi 230 mm, outlet Ø 40 mm, - European model 150.616.21.1

- **Brass drain handle and valve**
- **For bathtub with a Ø52 mm waste opening**

P1A.302.A02 P1A.302.D30 P1A.302.H49
P1A.302.H50 P1A.302.H55 P1A.302.H56 P1A.302.H67



P1A.302GM

Geberit bath waste, big size, adjustable height: mini 165 mm / maxi 580 mm; adjustable projection: mini 110 mm / maxi 700 mm - outlet, Ø 40 mm, delivered with stylised control knob - European model 150.616.21.1

- **Brass drain handle and valve**
- **For bathtub with a Ø52 mm waste opening**

P1A.302GM.A02 P1A.302GM.D30 P1A.302GM.H49
P1A.302GM.H50 P1A.302GM.H55 P1A.302GM.H56 P1A.302GM.H67



P00.305/H

Complete manual bath click waste, for baths with integrated overflow or overflow rim

- **Brass valve and waste, plated**
- **For bathtub with a Ø52 mm waste opening, Ø70 mm cap**
- **Brass drain and plug**

P00.305/H.A02 P00.305/H.D30 P00.305/H.H49
P00.305/H.H50 P00.305/H.H55 P00.305/H.H56 P00.305/H.H67



THERMOSTATIC SHOWER



P1A.6528BB

Wall mounted thermostatic shower mixer ½" with sliding bar, hose and hand shower

- Brass
- Thermostatic control with temperature stop 38°C, max. 50°C
- Anti-scald safety THERMO COOL CONTACT
- 150 mm centres
- 1.5 m Soft Touch silicone hose
- Brass single-jet hand shower
  with EASY CLEAN nozzles
  Flowrate: 8L/min at 3bar
- Slidebar height: 670 mm, 600 mm centres

P1A.6528BB.A02 P1A.6528BB.B01 P1A.6528BB.D30 P1A.6528BB.H49
P1A.6528BB.H50 P1A.6528BB.H55 P1A.6528BB.H56 P1A.6528BB.H67



P1A.6529CD

Wall mounted thermostatic shower mixer ½" with shower column, shower head Ø 200 mm, hose and hand shower

- Brass
- Thermostatic control with temperature stop 38°C, max. 50°C
- Anti-scald safety THERMO COOL CONTACT
- 150 mm centres
- Brass showerhead Ø200 mm with EASY CLEAN nozzles
  Flowrate: 9.5L/min at 3bar
- 1.5 m Soft Touch silicone hose
- Brass single-jet hand shower
  with EASY CLEAN nozzles
  Flowrate: 8L/min at 3bar
- Height: 1163 mm - Maximum showerhead projection: 463 mm - Fixing distance: 937 mm

P1A.6529CD.A02 P1A.6529CD.B01 P1A.6529CD.D30 P1A.6529CD.H49
P1A.6529CD.H50 P1A.6529CD.H55 P1A.6529CD.H56 P1A.6529CD.H67



P1A.6529CG

Wall mounted thermostatic shower mixer ½" with shower column, shower head Ø 300 mm, hand shower and hose

- Brass
- Thermostatic control with temperature stop 38°C, max. 50°C
- Anti-scald safety THERMO COOL CONTACT
- 150 mm centres
- Brass showerhead Ø300 mm with EASY CLEAN nozzles
  Flowrate: 9.5L/min at 3bar
- 1.5 m Soft Touch silicone hose
- Brass single-jet hand shower
  with EASY CLEAN nozzles
  Flowrate: 8L/min at 3bar
- Height: 1163 mm - Maximum showerhead projection: 463 mm - Fixing distance: 937 mm

P1A.6529CG.A02 P1A.6529CG.B01 P1A.6529CG.D30 P1A.6529CG.H49
P1A.6529CG.H50 P1A.6529CG.H55 P1A.6529CG.H56 P1A.6529CG.H67

OPTION

3-JET HAND SHOWER EXTRA-COST

- EASY CLEAN nozzles
- Flowrate: 8L/min at 3bar



P00.OP3JA.A02 P00.OP3JA.B01 P00.OP3JA.D30 P00.OP3JA.H49
P00.OP3JA.H50 P00.OP3JA.H55 P00.OP3JA.H56 P00.OP3JA.H67

OYAT

SINGLE-FUNCTION SHOWER SET



- Trim only for manual mixing valve
- Slidebar and single-jet hand shower

PRODUCT INFORMATION

- Brass
- 1.5 m Soft Touch silicone hose
- Brass single-jet hand shower with EASY CLEAN nozzles Flowrate: 8L/min at 3bar
- Slidebar height: 670 mm, 600 mm centres



TO ORDER WITH ROUGH PART:

P00.6541SPA

TECHNICAL DETAILS SEE P.200

P1A.6571SPB.A02 P1A.6571SPB.B01 P1A.6571SPB.D30 P1A.6571SPB.H49
P1A.6571SPB.H50 P1A.6571SPB.H55 P1A.6571SPB.H56 P1A.6571SPB.H67

2-FUNCTION SHOWER SETS



- Trim only for manual mixing valve
- Automatic diverter
- Showerhead Ø200 mm with wall-mounted shower arm
- Set with single-jet hand shower and holder of your choice

PRODUCT INFORMATION

- Brass
- Brass showerhead with EASY CLEAN nozzles Flowrate: 9.5L/min at 3bar
- 1.5 m Soft Touch silicone hose
- Brass single-jet hand shower with EASY CLEAN nozzles Flowrate: 8L/min at 3bar

Model shown ref. P1A.6550R1C.H56





TO ORDER WITH ROUGH PART:

P00.6550SPA

TECHNICAL DETAILS SEE P.201



Wall arm L450 mm and showerhead Ø200 mm

Hand shower and hook



P1A.6550R1C.A02 P1A.6550R1C.B01 P1A.6550R1C.D30 P1A.6550R1C.H49
P1A.6550R1C.H50 P1A.6550R1C.H55 P1A.6550R1C.H56 P1A.6550R1C.H67

Hand shower on rail L670 mm, centre distance 600 mm



P1A.6550R1B.A02 P1A.6550R1B.B01 P1A.6550R1B.D30 P1A.6550R1B.H49
P1A.6550R1B.H50 P1A.6550R1B.H55 P1A.6550R1B.H56 P1A.6550R1B.H67

OPTION

3-JET HAND SHOWER EXTRA-COST

- EASY CLEAN nozzles
- Flowrate: 8L/min at 3bar



P00.0P3JA.A02 P00.0P3JA.B01 P00.0P3JA.D30 P00.0P3JA.H49
P00.0P3JA.H50 P00.0P3JA.H55 P00.0P3JA.H56 P00.0P3JA.H67

2-FUNCTION THERMOSTATIC SHOWER SETS



- Trim for thermostatic mixer with 2 outlets
- Showerhead Ø200 mm with shower arm of your choice
- Set with single-jet hand shower and holder of your choice

PRODUCT INFORMATION

- Brass
- 130x205 mm plate
- Brass showerhead with EASY CLEAN nozzles Flowrate: 9.5L/min at 3bar
- 1.5 m Soft Touch silicone hose
- Brass single-jet hand shower with EASY CLEAN nozzles Flowrate: 8L/min at 3bar

Model shown ref. P1A.D2M1C.H56





TO ORDER WITH ROUGH PART:

P00.THMD2

TECHNICAL DETAILS SEE P.204



EXTENSION AVAILABLE:

P00.THAL20

TECHNICAL DETAILS SEE P.207

Wall arm L450 mm and showerhead Ø200 mm	Hand shower and hook		P1A.D2M1C.A02	P1A.D2M1C.B01	P1A.D2M1C.D30	P1A.D2M1C.H49
			P1A.D2M1C.H50	P1A.D2M1C.H55	P1A.D2M1C.H56	P1A.D2M1C.H67
	Hand shower and shelf 300x100 mm		P1A.D2M1T.A02	P1A.D2M1T.B01	P1A.D2M1T.D30	P1A.D2M1T.H49
			P1A.D2M1T.H50	P1A.D2M1T.H55	P1A.D2M1T.H56	P1A.D2M1T.H67
	Hand shower on rail L670 mm, centre distance 600 mm		P1A.D2M1B.A02	P1A.D2M1B.B01	P1A.D2M1B.D30	P1A.D2M1B.H49
			P1A.D2M1B.H50	P1A.D2M1B.H55	P1A.D2M1B.H56	P1A.D2M1B.H67
Vertical arm L120 mm and showerhead Ø200 mm	Hand shower and hook		P1A.D2M2C.A02	P1A.D2M2C.B01	P1A.D2M2C.D30	P1A.D2M2C.H49
			P1A.D2M2C.H50	P1A.D2M2C.H55	P1A.D2M2C.H56	P1A.D2M2C.H67
	Hand shower and shelf 300x100 mm		P1A.D2M2T.A02	P1A.D2M2T.B01	P1A.D2M2T.D30	P1A.D2M2T.H49
			P1A.D2M2T.H50	P1A.D2M2T.H55	P1A.D2M2T.H56	P1A.D2M2T.H67
	Hand shower on rail L670 mm, centre distance 600 mm		P1A.D2M2B.A02	P1A.D2M2B.B01	P1A.D2M2B.D30	P1A.D2M2B.H49
			P1A.D2M2B.H50	P1A.D2M2B.H55	P1A.D2M2B.H56	P1A.D2M2B.H67

OPTION

3-JET HAND SHOWER EXTRA-COST

- EASY CLEAN nozzles
- Flowrate: 8L/min at 3bar



P00.OP3JA.A02	P00.OP3JA.B01	P00.OP3JA.D30	P00.OP3JA.H49
P00.OP3JA.H50	P00.OP3JA.H55	P00.OP3JA.H56	P00.OP3JA.H67

2-FUNCTION THERMOSTATIC SHOWER SETS



- Trim for thermostatic mixer with 2 outlets
- Showerhead Ø300 mm with shower arm of your choice
- Set with single-jet hand shower and holder of your choice

PRODUCT INFORMATION

- Brass
- 130x335 mm plate
- Brass showerhead with EASY CLEAN nozzles Flowrate: 9.5L/min at 3bar
- 1.5 m Soft Touch silicone hose
- Brass single-jet hand shower with EASY CLEAN nozzles Flowrate: 8L/min at 3bar

Model shown ref. P1A.V2MH5C.H56





TO ORDER WITH ROUGH PART:

P00.THMV2H

TECHNICAL DETAILS SEE P.205



EXTENSION AVAILABLE:

P00.THAL20

TECHNICAL DETAILS SEE P.207



Wall arm L450 mm and showerhead Ø300 mm	Hand shower and hook		P1A.V2MH5C.A02	P1A.V2MH5C.B01	P1A.V2MH5C.D30	P1A.V2MH5C.H49
			P1A.V2MH5C.H50	P1A.V2MH5C.H55	P1A.V2MH5C.H56	P1A.V2MH5C.H67
	Hand shower and shelf 300x100 mm		P1A.V2MH5T.A02	P1A.V2MH5T.B01	P1A.V2MH5T.D30	P1A.V2MH5T.H49
			P1A.V2MH5T.H50	P1A.V2MH5T.H55	P1A.V2MH5T.H56	P1A.V2MH5T.H67
	Hand shower on rail L670 mm, centre distance 600 mm		P1A.V2MH5B.A02	P1A.V2MH5B.B01	P1A.V2MH5B.D30	P1A.V2MH5B.H49
			P1A.V2MH5B.H50	P1A.V2MH5B.H55	P1A.V2MH5B.H56	P1A.V2MH5B.H67
Vertical arm L120 mm and showerhead Ø300 mm	Hand shower and hook		P1A.V2MH6C.A02	P1A.V2MH6C.B01	P1A.V2MH6C.D30	P1A.V2MH6C.H49
			P1A.V2MH6C.H50	P1A.V2MH6C.H55	P1A.V2MH6C.H56	P1A.V2MH6C.H67
	Hand shower and shelf 300x100 mm		P1A.V2MH6T.A02	P1A.V2MH6T.B01	P1A.V2MH6T.D30	P1A.V2MH6T.H49
			P1A.V2MH6T.H50	P1A.V2MH6T.H55	P1A.V2MH6T.H56	P1A.V2MH6T.H67
	Hand shower on rail L670 mm, centre distance 600 mm		P1A.V2MH6B.A02	P1A.V2MH6B.B01	P1A.V2MH6B.D30	P1A.V2MH6B.H49
			P1A.V2MH6B.H50	P1A.V2MH6B.H55	P1A.V2MH6B.H56	P1A.V2MH6B.H67

OPTION

3-JET HAND SHOWER EXTRA-COST

- EASY CLEAN nozzles
- Flowrate: 8L/min at 3bar



P00.OP3JA.A02	P00.OP3JA.B01	P00.OP3JA.D30	P00.OP3JA.H49
P00.OP3JA.H50	P00.OP3JA.H55	P00.OP3JA.H56	P00.OP3JA.H67

2-FUNCTION THERMOSTATIC SHOWER SETS



- Trim for thermostatic mixer with 2 outlets
- Stainless steel sky shower Ø380 mm
- Set with single-jet hand shower and holder of your choice

PRODUCT INFORMATION

- Brass
- 130x335 mm plate
- Sky shower with EASY CLEAN nozzles Flowrate: 14.5L/min at 3bar
- 1.5 m Soft Touch silicone hose
- Brass single-jet hand shower with EASY CLEAN nozzles Flowrate: 8L/min at 3bar

Model shown ref. P1A.V2MH9C.H56

PLEASE NOTE: FOR PACKS ORDERED IN FINISHES A02 AND B01, THE SKYSHOWER WILL BE DELIVERED IN A POLISHED STAINLESS STEEL FINISH.





TO ORDER WITH ROUGH PART:

P00.THMV2H

TECHNICAL DETAILS SEE P.205



EXTENSION AVAILABLE:

P00.THAL20

TECHNICAL DETAILS SEE P.207



Skyshower Ø380 mm

Hand shower and hook		P1A.V2MH9C.A02	P1A.V2MH9C.B01	P1A.V2MH9C.D30	P1A.V2MH9C.H49
		P1A.V2MH9C.H50	P1A.V2MH9C.H55	P1A.V2MH9C.H56	P1A.V2MH9C.H67
Hand shower and shelf 300x100 mm		P1A.V2MH9T.A02	P1A.V2MH9T.B01	P1A.V2MH9T.D30	P1A.V2MH9T.H49
		P1A.V2MH9T.H50	P1A.V2MH9T.H55	P1A.V2MH9T.H56	P1A.V2MH9T.H67
Hand shower on rail L670 mm, centre distance 600 mm		P1A.V2MH9B.A02	P1A.V2MH9B.B01	P1A.V2MH9B.D30	P1A.V2MH9B.H49
		P1A.V2MH9B.H50	P1A.V2MH9B.H55	P1A.V2MH9B.H56	P1A.V2MH9B.H67

OPTION

3-JET HAND SHOWER EXTRA-COST

- EASY CLEAN nozzles
- Flowrate: 8L/min at 3bar



P00.OP3JA.A02	P00.OP3JA.B01	P00.OP3JA.D30	P00.OP3JA.H49
P00.OP3JA.H50	P00.OP3JA.H55	P00.OP3JA.H56	P00.OP3JA.H67

2-FUNCTION THERMOSTATIC SHOWER SETS



- Trim for thermostatic mixer with 2 outlets
- Stainless steel sky shower Ø380 mm or showerhead Ø300 mm with shower arm of your choice
- Plate-mounted single-jet hand shower

PRODUCT INFORMATION

- Brass
- 440x130 mm plate
- Brass showerhead with EASY CLEAN nozzles Flowrate: 9.5L/min at 3bar
- Sky shower with EASY CLEAN nozzles Flowrate: 14.5L/min at 3bar
- 1.5 m Soft Touch silicone hose
- Brass single-jet hand shower with EASY CLEAN nozzles Flowrate: 8L/min at 3bar

Model shown ref. P1A.V2MRX5.H56

PLEASE NOTE: FOR PACKS ORDERED IN FINISHES A02 AND B01, THE SKYSHOWER WILL BE DELIVERED IN A POLISHED STAINLESS STEEL FINISH.





TO ORDER WITH ROUGH PART:

P00.THMV2RX1

TECHNICAL DETAILS SEE P.205



EXTENSION AVAILABLE:

P00.THAL20

TECHNICAL DETAILS SEE P.207

Wall arm L450 mm and showerhead Ø300 mm		P1A.V2MRX5.A02	P1A.V2MRX5.B01	P1A.V2MRX5.D30	P1A.V2MRX5.H49
		P1A.V2MRX5.H50	P1A.V2MRX5.H55	P1A.V2MRX5.H56	P1A.V2MRX5.H67
Vertical arm L120 mm and showerhead Ø300 mm		P1A.V2MRX6.A02	P1A.V2MRX6.B01	P1A.V2MRX6.D30	P1A.V2MRX6.H49
		P1A.V2MRX6.H50	P1A.V2MRX6.H55	P1A.V2MRX6.H56	P1A.V2MRX6.H67
Skyshower Ø380 mm		P1A.V2MRX9.A02	P1A.V2MRX9.B01	P1A.V2MRX9.D30	P1A.V2MRX9.H49
		P1A.V2MRX9.H50	P1A.V2MRX9.H55	P1A.V2MRX9.H56	P1A.V2MRX9.H67

OPTION

3-JET HAND SHOWER EXTRA-COST

- EASY CLEAN nozzles
- Flowrate: 8L/min at 3bar



P00.OP3JA.A02	P00.OP3JA.B01	P00.OP3JA.D30	P00.OP3JA.H49
P00.OP3JA.H50	P00.OP3JA.H55	P00.OP3JA.H56	P00.OP3JA.H67

2-FUNCTION THERMOSTATIC SHOWER SETS



- Trim for thermostatic mixer with 2 outlets
- Trim only for valves
- Showerhead Ø200 mm with shower arm of your choice
- Set with single-jet hand shower and holder of your choice

PRODUCT INFORMATION

- **Brass**
- **Brass showerhead with EASY CLEAN nozzles Flowrate: 9.5L/min at 3bar**
- **1.5 m Soft Touch silicone hose**
- **Brass single-jet hand shower with EASY CLEAN nozzles Flowrate: 8L/min at 3bar**

Model shown ref. P1A.BV2M1C.H56





TO ORDER WITH ROUGH PART:

P00.THM2VA

TECHNICAL DETAILS SEE P.206



EXTENSION AVAILABLE:

P00.THAL20

TECHNICAL DETAILS SEE P.207

Wall arm L450 mm and showerhead Ø200 mm	Hand shower and hook		P1A.BV2M1C.A02	P1A.BV2M1C.B01	P1A.BV2M1C.D30	P1A.BV2M1C.H49
			P1A.BV2M1C.H50	P1A.BV2M1C.H55	P1A.BV2M1C.H56	P1A.BV2M1C.H67
	Hand shower and shelf 300x100 mm		P1A.BV2M1T.A02	P1A.BV2M1T.B01	P1A.BV2M1T.D30	P1A.BV2M1T.H49
			P1A.BV2M1T.H50	P1A.BV2M1T.H55	P1A.BV2M1T.H56	P1A.BV2M1T.H67
	Hand shower on rail L670 mm, centre distance 600 mm		P1A.BV2M1B.A02	P1A.BV2M1B.B01	P1A.BV2M1B.D30	P1A.BV2M1B.H49
			P1A.BV2M1B.H50	P1A.BV2M1B.H55	P1A.BV2M1B.H56	P1A.BV2M1B.H67
Vertical arm L120 mm and showerhead Ø200 mm	Hand shower and hook		P1A.BV2M2C.A02	P1A.BV2M2C.B01	P1A.BV2M2C.D30	P1A.BV2M2C.H49
			P1A.BV2M2C.H50	P1A.BV2M2C.H55	P1A.BV2M2C.H56	P1A.BV2M2C.H67
	Hand shower and shelf 300x100 mm		P1A.BV2M2T.A02	P1A.BV2M2T.B01	P1A.BV2M2T.D30	P1A.BV2M2T.H49
			P1A.BV2M2T.H50	P1A.BV2M2T.H55	P1A.BV2M2T.H56	P1A.BV2M2T.H67
	Hand shower on rail L670 mm, centre distance 600 mm		P1A.BV2M2B.A02	P1A.BV2M2B.B01	P1A.BV2M2B.D30	P1A.BV2M2B.H49
			P1A.BV2M2B.H50	P1A.BV2M2B.H55	P1A.BV2M2B.H56	P1A.BV2M2B.H67

OPTION

3-JET HAND SHOWER EXTRA-COST

- **EASY CLEAN nozzles**
- **Flowrate: 8L/min at 3bar**



P00.OP3JA.A02	P00.OP3JA.B01	P00.OP3JA.D30	P00.OP3JA.H49
P00.OP3JA.H50	P00.OP3JA.H55	P00.OP3JA.H56	P00.OP3JA.H67

2-FUNCTION THERMOSTATIC SHOWER SETS



- Trim for thermostatic mixer with 2 outlets
- Trim only for valves
- Stainless steel sky shower Ø380 mm
- Set with single-jet hand shower and holder of your choice

PRODUCT INFORMATION

- Brass
- Sky shower with EASY CLEAN nozzles Flowrate: 14.5L/min at 3bar
- 1.5 m Soft Touch silicone hose
- Brass single-jet hand shower with EASY CLEAN nozzles Flowrate: 8L/min at 3bar

Model shown ref. P1A.BV2M9C.H56

PLEASE NOTE: FOR PACKS ORDERED IN FINISHES A02 AND B01, THE SKYSHOWER WILL BE DELIVERED IN A POLISHED STAINLESS STEEL FINISH.





TO ORDER WITH ROUGH PART:

P00.THM2VA

TECHNICAL DETAILS SEE P.206



EXTENSION AVAILABLE:

P00.THAL20

TECHNICAL DETAILS SEE P.207



Skyshower Ø380 mm

Hand shower and hook		P1A.BV2M9C.A02	P1A.BV2M9C.B01	P1A.BV2M9C.D30	P1A.BV2M9C.H49
		P1A.BV2M9C.H50	P1A.BV2M9C.H55	P1A.BV2M9C.H56	P1A.BV2M9C.H67
Hand shower and shelf 300x100 mm		P1A.BV2M9T.A02	P1A.BV2M9T.B01	P1A.BV2M9T.D30	P1A.BV2M9T.H49
		P1A.BV2M9T.H50	P1A.BV2M9T.H55	P1A.BV2M9T.H56	P1A.BV2M9T.H67
Hand shower on rail L670 mm, centre distance 600 mm		P1A.BV2M9B.A02	P1A.BV2M9B.B01	P1A.BV2M9B.D30	P1A.BV2M9B.H49
		P1A.BV2M9B.H50	P1A.BV2M9B.H55	P1A.BV2M9B.H56	P1A.BV2M9B.H67

OPTION

3-JET HAND SHOWER EXTRA-COST

- EASY CLEAN nozzles
- Flowrate: 8L/min at 3bar



P00.OP3JA.A02	P00.OP3JA.B01	P00.OP3JA.D30	P00.OP3JA.H49
P00.OP3JA.H50	P00.OP3JA.H55	P00.OP3JA.H56	P00.OP3JA.H67

OYAT

2-FUNCTION THERMOSTATIC SHOWER SETS



- Trim for thermostatic mixer with 2 outlets and **PUSH** controls
- Showerhead Ø200 mm with shower arm of your choice
- Set with single-jet hand shower and holder of your choice

PRODUCT INFORMATION

- Brass
- 130x295 mm plate
- Brass showerhead with EASY CLEAN nozzles Flowrate: 9.5L/min at 3bar
- 1.5 m Soft Touch silicone hose
- Brass single-jet hand shower with EASY CLEAN nozzles Flowrate: 8L/min at 3bar

Model shown ref. P1A.P2MH1C.H56





TO ORDER WITH ROUGH PART:

P00.THMP2H

TECHNICAL DETAILS SEE P.206



EXTENSION AVAILABLE:

P00.THAL20

TECHNICAL DETAILS SEE P.207

Wall arm L450 mm and showerhead Ø200 mm	Hand shower and hook		P1A.P2MH1C.A02	P1A.P2MH1C.B01	P1A.P2MH1C.D30	P1A.P2MH1C.H49
			P1A.P2MH1C.H50	P1A.P2MH1C.H55	P1A.P2MH1C.H56	P1A.P2MH1C.H67
	Hand shower and shelf 300x100 mm		P1A.P2MH1T.A02	P1A.P2MH1T.B01	P1A.P2MH1T.D30	P1A.P2MH1T.H49
			P1A.P2MH1T.H50	P1A.P2MH1T.H55	P1A.P2MH1T.H56	P1A.P2MH1T.H67
	Hand shower on rail L670 mm, centre distance 600 mm		P1A.P2MH1B.A02	P1A.P2MH1B.B01	P1A.P2MH1B.D30	P1A.P2MH1B.H49
			P1A.P2MH1B.H50	P1A.P2MH1B.H55	P1A.P2MH1B.H56	P1A.P2MH1B.H67
Vertical arm L120 mm and showerhead Ø200 mm	Hand shower and hook		P1A.P2MH2C.A02	P1A.P2MH2C.B01	P1A.P2MH2C.D30	P1A.P2MH2C.H49
			P1A.P2MH2C.H50	P1A.P2MH2C.H55	P1A.P2MH2C.H56	P1A.P2MH2C.H67
	Hand shower and shelf 300x100 mm		P1A.P2MH2T.A02	P1A.P2MH2T.B01	P1A.P2MH2T.D30	P1A.P2MH2T.H49
			P1A.P2MH2T.H50	P1A.P2MH2T.H55	P1A.P2MH2T.H56	P1A.P2MH2T.H67
	Hand shower on rail L670 mm, centre distance 600 mm		P1A.P2MH2B.A02	P1A.P2MH2B.B01	P1A.P2MH2B.D30	P1A.P2MH2B.H49
			P1A.P2MH2B.H50	P1A.P2MH2B.H55	P1A.P2MH2B.H56	P1A.P2MH2B.H67

OPTION

3-JET HAND SHOWER EXTRA-COST

- EASY CLEAN nozzles
- Flowrate: 8L/min at 3bar



P00.OP3JA.A02	P00.OP3JA.B01	P00.OP3JA.D30	P00.OP3JA.H49
P00.OP3JA.H50	P00.OP3JA.H55	P00.OP3JA.H56	P00.OP3JA.H67

2-FUNCTION THERMOSTATIC SHOWER SETS



- Trim for thermostatic mixer with 2 outlets and **PUSH** controls
- Stainless steel sky shower Ø380 mm
- Set with single-jet hand shower and holder of your choice

PRODUCT INFORMATION

- Brass
- 130x295 mm plate
- Sky shower with EASY CLEAN nozzles Flowrate: 14.5L/min at 3bar
- 1.5 m Soft Touch silicone hose
- Brass single-jet hand shower with EASY CLEAN nozzles Flowrate: 8L/min at 3bar

Model shown ref. P1A.P2MH9C.H56

PLEASE NOTE: FOR PACKS ORDERED IN FINISHES A02 AND B01, THE SKYSHOWER WILL BE DELIVERED IN A POLISHED STAINLESS STEEL FINISH.





TO ORDER WITH ROUGH PART:

P00.THMP2H

TECHNICAL DETAILS SEE P.206



EXTENSION AVAILABLE:

P00.THAL20

TECHNICAL DETAILS SEE P.207

	Hand shower and hook		P1A.P2MH9C.A02 P1A.P2MH9C.H50	P1A.P2MH9C.B01 P1A.P2MH9C.H55	P1A.P2MH9C.D30 P1A.P2MH9C.H56	P1A.P2MH9C.H49 P1A.P2MH9C.H67
 Skyshower Ø380 mm	Hand shower and shelf 300x100 mm		P1A.P2MH9T.A02 P1A.P2MH9T.H50	P1A.P2MH9T.B01 P1A.P2MH9T.H55	P1A.P2MH9T.D30 P1A.P2MH9T.H56	P1A.P2MH9T.H49 P1A.P2MH9T.H67
	Hand shower on rail L670 mm, centre distance 600 mm		P1A.P2MH9B.A02 P1A.P2MH9B.H50	P1A.P2MH9B.B01 P1A.P2MH9B.H55	P1A.P2MH9B.D30 P1A.P2MH9B.H56	P1A.P2MH9B.H49 P1A.P2MH9B.H67

OPTION

3-JET HAND SHOWER EXTRA-COST

- EASY CLEAN nozzles
- Flowrate: 8L/min at 3bar



P00.OP3JA.A02 P00.OP3JA.H50	P00.OP3JA.B01 P00.OP3JA.H55	P00.OP3JA.D30 P00.OP3JA.H56	P00.OP3JA.H49 P00.OP3JA.H67

3-FUNCTION THERMOSTATIC SHOWER SETS







- Trim for thermostatic mixer with 3 outlets
- Stainless steel wall-mounted shower water blade
- Showerhead Ø300 mm with shower arm of your choice
- Set with single-jet hand shower and holder of your choice

PRODUCT INFORMATION

- Brass
- 130x445 mm plate
- Brass showerhead with EASY CLEAN nozzles Flowrate: 9.5L/min at 3bar
- Wall-mounted shower water blade flowrate: 17L/min at 3bar
- 1.5 m Soft Touch silicone hose
- Brass single-jet hand shower with EASY CLEAN nozzles Flowrate: 8L/min at 3bar

Model shown ref. P1A.V3MH5CL.H56

PLEASE NOTE: FOR PACKS ORDERED IN FINISHES A02 AND B01, THE WATER BLADE WILL BE DELIVERED IN A POLISHED STAINLESS STEEL FINISH.



TO ORDER WITH ROUGH PART:

P00.THMV3H

TECHNICAL DETAILS SEE P.203



EXTENSION AVAILABLE:

P00.THAL20

TECHNICAL DETAILS SEE P.207

Wall arm L450 mm and showerhead Ø300 mm	Hand shower and hook		P1A.V3MH5CL.A02 P1A.V3MH5CL.H50	P1A.V3MH5CL.B01 P1A.V3MH5CL.H55	P1A.V3MH5CL.D30 P1A.V3MH5CL.H56	P1A.V3MH5CL.H49 P1A.V3MH5CL.H67
	Hand shower and shelf 300x100 mm		P1A.V3MH5TL.A02 P1A.V3MH5TL.H50	P1A.V3MH5TL.B01 P1A.V3MH5TL.H55	P1A.V3MH5TL.D30 P1A.V3MH5TL.H56	P1A.V3MH5TL.H49 P1A.V3MH5TL.H67
	Hand shower on rail L670 mm, centre distance 600 mm		P1A.V3MH5BL.A02 P1A.V3MH5BL.H50	P1A.V3MH5BL.B01 P1A.V3MH5BL.H55	P1A.V3MH5BL.D30 P1A.V3MH5BL.H56	P1A.V3MH5BL.H49 P1A.V3MH5BL.H67
Vertical arm L120 mm and showerhead Ø300 mm	Hand shower and hook		P1A.V3MH6CL.A02 P1A.V3MH6CL.H50	P1A.V3MH6CL.B01 P1A.V3MH6CL.H55	P1A.V3MH6CL.D30 P1A.V3MH6CL.H56	P1A.V3MH6CL.H49 P1A.V3MH6CL.H67
	Hand shower and shelf 300x100 mm		P1A.V3MH6TL.A02 P1A.V3MH6TL.H50	P1A.V3MH6TL.B01 P1A.V3MH6TL.H55	P1A.V3MH6TL.D30 P1A.V3MH6TL.H56	P1A.V3MH6TL.H49 P1A.V3MH6TL.H67
	Hand shower on rail L670 mm, centre distance 600 mm		P1A.V3MH6BL.A02 P1A.V3MH6BL.H50	P1A.V3MH6BL.B01 P1A.V3MH6BL.H55	P1A.V3MH6BL.D30 P1A.V3MH6BL.H56	P1A.V3MH6BL.H49 P1A.V3MH6BL.H67

OPTION

3-JET HAND SHOWER EXTRA-COST

- EASY CLEAN nozzles
- Flowrate: 8L/min at 3bar



P00.OP3JA.A02 P00.OP3JA.H50	P00.OP3JA.B01 P00.OP3JA.H55	P00.OP3JA.D30 P00.OP3JA.H56	P00.OP3JA.H49 P00.OP3JA.H67

3-FUNCTION THERMOSTATIC SHOWER SETS





- Trim for thermostatic mixer with 3 outlets
- Stainless steel sky shower Ø380 mm
- Stainless steel wall-mounted shower water blade or wall-mounted body jets
- Set with single-jet hand shower and holder of your choice

PRODUCT INFORMATION

- Brass
- 130x445 mm plate
- Sky shower with EASY CLEAN nozzles Flowrate: 14.5L/min at 3bar
- Wall-mounted shower water blade flowrate: 17L/min at 3bar
- Wall-mounted body jets with EASY CLEAN nozzles Flowrate: 4L/min at 3bar
- 1.5 m Soft Touch silicone hose
- Brass single-jet hand shower with EASY CLEAN nozzles Flowrate: 8L/min at 3bar

Model shown ref. P1A.V3MH9CL.H56

PLEASE NOTE: FOR PACKS ORDERED IN FINISHES A02 AND B01, THE SKYSHOWER AND WATER BLADE WILL BE DELIVERED IN A POLISHED STAINLESS STEEL FINISH.





TO ORDER WITH ROUGH PART:

P00.THMV3H

TECHNICAL DETAILS SEE P.203



EXTENSION AVAILABLE:

P00.THAL20

TECHNICAL DETAILS SEE P.207





Stainless steel wall-mounted water blade, 300x145 mm

Hand shower and hook		P1A.V3MH9CL.A02	P1A.V3MH9CL.B01	P1A.V3MH9CL.D30	P1A.V3MH9CL.H49
		P1A.V3MH9CL.H50	P1A.V3MH9CL.H55	P1A.V3MH9CL.H56	P1A.V3MH9CL.H67
Hand shower and shelf 300x100 mm		P1A.V3MH9TL.A02	P1A.V3MH9TL.B01	P1A.V3MH9TL.D30	P1A.V3MH9TL.H49
		P1A.V3MH9TL.H50	P1A.V3MH9TL.H55	P1A.V3MH9TL.H56	P1A.V3MH9TL.H67
Hand shower on rail L670 mm, centre distance 600 mm		P1A.V3MH9BL.A02	P1A.V3MH9BL.B01	P1A.V3MH9BL.D30	P1A.V3MH9BL.H49
		P1A.V3MH9BL.H50	P1A.V3MH9BL.H55	P1A.V3MH9BL.H56	P1A.V3MH9BL.H67



6 round built-in side jets Ø90 mm

Hand shower and hook		P1A.V3MH9CJ.A02	P1A.V3MH9CJ.B01	P1A.V3MH9CJ.D30	P1A.V3MH9CJ.H49
		P1A.V3MH9CJ.H50	P1A.V3MH9CJ.H55	P1A.V3MH9CJ.H56	P1A.V3MH9CJ.H67
Hand shower and shelf 300x100 mm		P1A.V3MH9TJ.A02	P1A.V3MH9TJ.B01	P1A.V3MH9TJ.D30	P1A.V3MH9TJ.H49
		P1A.V3MH9TJ.H50	P1A.V3MH9TJ.H55	P1A.V3MH9TJ.H56	P1A.V3MH9TJ.H67
Hand shower on rail L670 mm, centre distance 600 mm		P1A.V3MH9BJ.A02	P1A.V3MH9BJ.B01	P1A.V3MH9BJ.D30	P1A.V3MH9BJ.H49
		P1A.V3MH9BJ.H50	P1A.V3MH9BJ.H55	P1A.V3MH9BJ.H56	P1A.V3MH9BJ.H67

OPTION

3-JET HAND SHOWER EXTRA-COST

- EASY CLEAN nozzles
- Flowrate: 8L/min at 3bar



P00.OP3JA.A02	P00.OP3JA.B01	P00.OP3JA.D30	P00.OP3JA.H49
P00.OP3JA.H50	P00.OP3JA.H55	P00.OP3JA.H56	P00.OP3JA.H67

3-FUNCTION THERMOSTATIC SHOWER SETS



- Trim for thermostatic mixer with 3 outlets
- Stainless steel sky shower 380x380 mm with central jet
- Set with single-jet hand shower and holder of your choice

PRODUCT INFORMATION

- Brass
- 130x445 mm plate
- Sky shower with EASY CLEAN nozzles
  Sky shower flowrate: 14.5L/min at 3bar
  Central jet flowrate: 20L/min at 3bar
- 1.5 m Soft Touch silicone hose
- Brass single-jet hand shower with EASY CLEAN nozzles
  Flowrate: 8L/min at 3bar

Model shown ref. P1A.V3MH11C.H56

PLEASE NOTE: FOR PACKS ORDERED IN FINISHES A02 AND B01, THE SKYSHOWER WILL BE DELIVERED IN A POLISHED STAINLESS STEEL FINISH.





TO ORDER WITH ROUGH PART:

P00.THMV3H

TECHNICAL DETAILS SEE P.203



EXTENSION AVAILABLE:

P00.THAL20

TECHNICAL DETAILS SEE P.207



Skyshower 380x380 mm with central jet

Hand shower and hook		P1A.V3MH11C.A02	P1A.V3MH11C.B01	P1A.V3MH11C.D30	P1A.V3MH11C.H49
		P1A.V3MH11C.H50	P1A.V3MH11C.H55	P1A.V3MH11C.H56	P1A.V3MH11C.H67
Hand shower and shelf 300x100 mm		P1A.V3MH11T.A02	P1A.V3MH11T.B01	P1A.V3MH11T.D30	P1A.V3MH11T.H49
		P1A.V3MH11T.H50	P1A.V3MH11T.H55	P1A.V3MH11T.H56	P1A.V3MH11T.H67
Hand shower on rail L670 mm, centre distance 600 mm		P1A.V3MH11B.A02	P1A.V3MH11B.B01	P1A.V3MH11B.D30	P1A.V3MH11B.H49
		P1A.V3MH11B.H50	P1A.V3MH11B.H55	P1A.V3MH11B.H56	P1A.V3MH11B.H67

OPTION

3-JET HAND SHOWER EXTRA-COST

- EASY CLEAN nozzles
- Flowrate: 8L/min at 3bar



P00.OP3JA.A02	P00.OP3JA.B01	P00.OP3JA.D30	P00.OP3JA.H49
P00.OP3JA.H50	P00.OP3JA.H55	P00.OP3JA.H56	P00.OP3JA.H67

3-FUNCTION THERMOSTATIC SHOWER SETS





- Trim for thermostatic mixer with 3 outlets
- Stainless steel sky shower Ø380 mm with stainless steel wall-mounted shower water blade or wall-mounted body jets, or only stainless steel sky shower 380x380 mm with central jet
- Plate-mounted single-jet hand shower

PRODUCT INFORMATION

- Brass
- 550x130 mm plate
- Sky shower with EASY CLEAN nozzles
  Flowrate: 14.5L/min at 3bar
- Wall-mounted shower water blade flowrate: 17L/min at 3bar
- Wall-mounted body jets with EASY CLEAN nozzles
  Flowrate: 4L/min at 3bar
- Sky shower with EASY CLEAN nozzles
  Sky shower flowrate: 14.5L/min at 3bar
  Central jet flowrate: 20L/min at 3bar
- 1.5 m Soft Touch silicone hose
- Brass single-jet hand shower with EASY CLEAN nozzles
  Flowrate: 8L/min at 3bar

Model shown ref. P1A.V3MRX9L.H56

PLEASE NOTE: FOR PACKS ORDERED IN FINISHES A02 AND B01, THE SKYSHOWERS AND WATER BLADES WILL BE DELIVERED IN A POLISHED STAINLESS STEEL FINISH.





TO ORDER WITH ROUGH PART:

P00.THMV3RX1

TECHNICAL DETAILS SEE P.207



EXTENSION AVAILABLE:

P00.THAL20

TECHNICAL DETAILS SEE P.207

Skyshower Ø380 mm	Stainless steel wall-mounted water blade, 300x145 mm		P1A.V3MRX9L.A02	P1A.V3MRX9L.B01	P1A.V3MRX9L.D30	P1A.V3MRX9L.H49
			P1A.V3MRX9L.H50	P1A.V3MRX9L.H55	P1A.V3MRX9L.H56	P1A.V3MRX9L.H67
	6 round built-in side jets Ø90 mm		P1A.V3MRX9J.A02	P1A.V3MRX9J.B01	P1A.V3MRX9J.D30	P1A.V3MRX9J.H49
			P1A.V3MRX9J.H50	P1A.V3MRX9J.H55	P1A.V3MRX9J.H56	P1A.V3MRX9J.H67
	Skyshower 380x380 mm with central jet		P1A.V3MRXT1.A02	P1A.V3MRXT1.B01	P1A.V3MRXT1.D30	P1A.V3MRXT1.H49
			P1A.V3MRXT1.H50	P1A.V3MRXT1.H55	P1A.V3MRXT1.H56	P1A.V3MRXT1.H67

OPTION

3-JET HAND SHOWER EXTRA-COST

- EASY CLEAN nozzles
- Flowrate: 8L/min at 3bar



P00.OP3JA.A02	P00.OP3JA.B01	P00.OP3JA.D30	P00.OP3JA.H49
P00.OP3JA.H50	P00.OP3JA.H55	P00.OP3JA.H56	P00.OP3JA.H67

3-FUNCTION THERMOSTATIC SHOWER SETS



- Trim for thermostatic mixer with 3 outlets and **PUSH** controls
- Stainless steel sky shower Ø380 mm with stainless steel wall-mounted shower water blade or wall-mounted body jets, or only stainless steel sky shower 380x380 mm with central jet
- Plate-mounted single-jet hand shower

PRODUCT INFORMATION

- Brass
- 470x130 mm plate
- Sky shower with EASY CLEAN nozzles Flowrate: 14.5L/min at 3bar
- Wall-mounted shower water blade flowrate: 17L/min at 3bar
- Wall-mounted body jets with EASY CLEAN nozzles Flowrate: 4L/min at 3bar
- Sky shower with EASY CLEAN nozzles Sky shower flowrate: 14.5L/min at 3bar Central jet flowrate: 20L/min at 3bar
- 1.5 m Soft Touch silicone hose
- Brass single-jet hand shower with EASY CLEAN nozzles Flowrate: 8L/min at 3bar

Model shown ref. P1A.P3MRX9L.H56

PLEASE NOTE: FOR PACKS ORDERED IN FINISHES A02 AND B01, THE SKYSHOWERS AND WATER BLADES WILL BE DELIVERED IN A POLISHED STAINLESS STEEL FINISH.





TO ORDER WITH ROUGH PART:

P00.THMP3RX1

TECHNICAL DETAILS SEE P.204



EXTENSION AVAILABLE:

P00.THAL20

TECHNICAL DETAILS SEE P.207

Skyshower Ø380 mm	Stainless steel wall-mounted water blade, 300x145 mm		P1A.P3MRX9L.A02	P1A.P3MRX9L.B01	P1A.P3MRX9L.D30	P1A.P3MRX9L.H49
			P1A.P3MRX9L.H50	P1A.P3MRX9L.H55	P1A.P3MRX9L.H56	P1A.P3MRX9L.H67
	6 round built-in side jets Ø90 mm		P1A.P3MRX9J.A02	P1A.P3MRX9J.B01	P1A.P3MRX9J.D30	P1A.P3MRX9J.H49
			P1A.P3MRX9J.H50	P1A.P3MRX9J.H55	P1A.P3MRX9J.H56	P1A.P3MRX9J.H67
	Skyshower 380x380 mm with central jet		P1A.P3MRXT1.A02	P1A.P3MRXT1.B01	P1A.P3MRXT1.D30	P1A.P3MRXT1.H49
			P1A.P3MRXT1.H50	P1A.P3MRXT1.H55	P1A.P3MRXT1.H56	P1A.P3MRXT1.H67

OPTION

3-JET HAND SHOWER EXTRA-COST

- EASY CLEAN nozzles
- Flowrate: 8L/min at 3bar



P00.OP3JA.A02	P00.OP3JA.B01	P00.OP3JA.D30	P00.OP3JA.H49
P00.OP3JA.H50	P00.OP3JA.H55	P00.OP3JA.H56	P00.OP3JA.H67

SHOWER DRAINS

Drains for walk-in showers and masonry showers, bottom outlet



FULL COVER GRID



TILE-READY COVER GRID



DECOR COVER GRID

☐ 100 mm

INSTRUCTION MANUAL

DECOR COVER GRID

P00.763B100C50
- Flowrate: 30L/min

P00.763B100C50.A08
P00.763B100C50.A09
P00.763B100C50.D30
P00.763B100C51.H49
P00.763B100C50.H50
P00.763B100C50.H55
P00.763B100C50.H56
P00.763B100C50.H67

☐ 125 mm

INSTRUCTION MANUAL

FULL COVER GRID

P00.763B125A50
- Flowrate: 20L/min

P00.763B125A50.A08
P00.763B125A50.A09
P00.763B125A50.D30
P00.763B125A50.H49
P00.763B125A50.H50
P00.763B125A50.H55
P00.763B125A50.H56
P00.763B125A50.H67

TILE-READY COVER GRID

P00.763B125B50
- Flowrate: 20L/min

P00.763B125B50.A08
P00.763B125B50.A09
P00.763B125B50.D30
P00.763B125B50.H49
P00.763B125B50.H50
P00.763B125B50.H55
P00.763B125B50.H56
P00.763B125B50.H67

DECOR COVER GRID

P00.763B125C50
- Flowrate: 30L/min

P00.763B125C50.A08
P00.763B125C50.A09
P00.763B125C50.D30
P00.763B125C50.H49
P00.763B125C50.H50
P00.763B125C50.H55
P00.763B125C50.H56
P00.763B125C50.H67

☐ 150 mm

INSTRUCTION MANUAL

FULL COVER GRID

P00.763B150A50
- Flowrate: 30L/min

P00.763B150A50.A08
P00.763B150A50.A09
P00.763B150A50.D30
P00.763B150A50.H49
P00.763B150A50.H50
P00.763B150A50.H55
P00.763B150A50.H56
P00.763B150A50.H67

TILE-READY COVER GRID

P00.763B150B50
- Flowrate: 30L/min

P00.763B150B50.A08
P00.763B150B50.A09
P00.763B150B50.D30
P00.763B150B50.H49
P00.763B150B50.H50
P00.763B150B50.H55
P00.763B150B50.H56
P00.763B150B50.H67

DECOR COVER GRID

P00.763B150C50
- Flowrate: 30L/min

P00.763B150C50.A08
P00.763B150C50.A09
P00.763B150C50.D30
P00.763B150C50.H49
P00.763B150C50.H50
P00.763B150C50.H55
P00.763B150C50.H56
P00.763B150C50.H67

SHOWER DRAINS

Drains for walk-in showers and masonry showers, side outlet



FULL COVER GRID



TILE-READY COVER GRID



DECOR COVER GRID

☐ 100 mm

INSTRUCTION MANUAL

P00.764S100C50
- Flowrate: 35L/min

P00.764S100C50.A08
P00.764S100C50.A09
P00.764S100C50.D30
P00.764S100C50.H49
P00.764S100C50.H50
P00.764S100C50.H55
P00.764S100C50.H56
P00.764S100C50.H67

☐ 125 mm

INSTRUCTION MANUAL

P00.764S125A50
- Flowrate: 30L/min

P00.764S125A50.A08
P00.764S125A50.A09
P00.764S125A50.D30
P00.764S125A50.H49
P00.764S125A50.H50
P00.764S125A50.H55
P00.764S125A50.H56
P00.764S125A50.H67

P00.764S125B50
- Flowrate: 30L/min

P00.764S125B50.A08
P00.764S125B50.A09
P00.764S125B50.D30
P00.764S125B50.H49
P00.764S125B50.H50
P00.764S125B50.H55
P00.764S125B50.H56
P00.764S125B50.H67

P00.764S125C50
- Flowrate: 35L/min

P00.764S125C50.A08
P00.764S125C50.A09
P00.764S125C50.D30
P00.764S125C50.H49
P00.764S125C50.H50
P00.764S125C50.H55
P00.764S125C50.H56
P00.764S125C50.H67

☐ 150 mm

INSTRUCTION MANUAL

P00.764S150A50
- Flowrate: 40L/min

P00.764S150A50.A08
P00.764S150A50.A09
P00.764S150A50.D30
P00.764S150A50.H49
P00.764S150A50.H50
P00.764S150A50.H55
P00.764S150A50.H56
P00.764S150A50.H67

P00.764S150B50
- Flowrate: 40L/min

P00.764S150B50.A08
P00.764S150B50.A09
P00.764S150B50.D30
P00.764S150B50.H49
P00.764S150B50.H50
P00.764S150B50.H55
P00.764S150B50.H56
P00.764S150B50.H67

P00.764S150C50
- Flowrate: 40L/min

P00.764S150C50.A08
P00.764S150C50.A09
P00.764S150C50.D30
P00.764S150C50.H49
P00.764S150C50.H50
P00.764S150C50.H55
P00.764S150C50.H56
P00.764S150C50.H67



SHOWER DRAINS

Linear drains for walk-in showers and masonry showers, side outlet

- **Flowrate: 45L/min**





	FULL COVER GRID	TILE-READY COVER GRID
700 mm	P00.7625700A50.A08 P00.7625700A50.A09 P00.7625700A50.D30 P00.7625700A50.H49 P00.7625700A50.H50 P00.7625700A50.H55 P00.7625700A50.H56 P00.7625700A50.H67	P00.7625700B50.A00
800 mm	P00.7625800A50.A08 P00.7625800A50.A09 P00.7625800A50.D30 P00.7625800A50.H49 P00.7625800A50.H50 P00.7625800A50.H55 P00.7625800A50.H56 P00.7625800A50.H67	P00.7625800B50.A00
900 mm	P00.7625900A50.A08 P00.7625900A50.A09 P00.7625900A50.D30 P00.7625900A50.H49 P00.7625900A50.H50 P00.7625900A50.H55 P00.7625900A50.H56 P00.7625900A50.H67	P00.7625900B50.A00

INSTRUCTION MANUAL

BIDET & TOILET



P1A.6504

Single lever bidet mixer with waste

- Brass
- Supplied with 1¼″ click waste
- Cold start and EASY FIX system
- Overall height: 185 mm - Maximul spout projection: 124 mm
- Flowrate: 8.4L/min at 3bar

P1A.6504.A02 P1A.6504.B01 P1A.6504.D30 P1A.6504.H49
P1A.6504.H50 P1A.6504.H55 P1A.6504.H56 P1A.6504.H67



P1A.5840/11

WC douche set including: trigger spray, hose and wall outlet with stop lever

- Brass
- 1.25 m Soft Touch silicone hose
- Flowrate: 8L/min at 3bar

P1A.5840/11.A02 P1A.5840/11.B01 P1A.5840/11.D30 P1A.5840/11.H49
P1A.5840/11.H50 P1A.5840/11.H55 P1A.5840/11.H56 P1A.5840/11.H67



P1A.5840SPB

Trim for WC douche including: trigger spray, wall mounted single lever mixer, hose, wall outlet with integrated elbow with safety stopper

- Brass
- Ceramic cartridge
- 1.25 m Soft Touch silicone hose
- Flowrate: 8L/min at 3bar



TO ORDER WITH ROUGH PART:

P00.6541SPA

TECHNICAL DETAILS SEE P.200

P1A.5840SPB.A02 P1A.5840SPB.B01 P1A.5840SPB.D30 P1A.5840SPB.H49
P1A.5840SPB.H50 P1A.5840SPB.H55 P1A.5840SPB.H56 P1A.5840SPB.H67

ACCESSORIES



P1A.538A

Wall mounted WC paper holder without cover

- **Width: 133 mm**

P1A.538A.A02 P1A.538A.B01 P1A.538A.D30 P1A.538A.H49
P1A.538A.H50 P1A.538A.H55 P1A.538A.H56 P1A.538A.H67



P1A.538AC

Wall mounted WC paper holder with cover

- **Width: 125 mm**

P1A.538AC.A02 P1A.538AC.B01 P1A.538AC.D30 P1A.538AC.H49
P1A.538AC.H50 P1A.538AC.H55 P1A.538AC.H56 P1A.538AC.H67



P1A.542

Wall mounted WC reserve paper holder

- **Height: 146 mm**

P1A.542.A02 P1A.542.B01 P1A.542.D30 P1A.542.H49
P1A.542.H50 P1A.542.H55 P1A.542.H56 P1A.542.H67



P1A.4720CJ

Stainless steel wall mounted WC brush with cover and holder

- **Height: 408 mm**
- **WC brush holder Ø80 mm**

P1A.4720CJ.A08 P1A.4720CJ.D30 P1A.4720CJ.H49
P1A.4720CJ.H50 P1A.4720CJ.H55 P1A.4720CJ.H56 P1A.4720CJ.H67



P1A.613M

Wall mounted liquid soap dispenser, with lever control

- **Height: 148 mm**

P1A.613M.A02 P1A.613M.B01 P1A.613M.D30 P1A.613M.H49
P1A.613M.H50 P1A.613M.H55 P1A.613M.H56 P1A.613M.H67

ACCESSORIES



P1A.613
Wall mounted liquid soap dispenser

- **Height: 156 mm**

P1A.613.A02 P1A.613.B01 P1A.613.D30 P1A.613.H49
P1A.613.H50 P1A.613.H55 P1A.613.H56 P1A.613.H67



P1A.500
Wall mounted glass soap dish

- **Ø110 mm soap dish**

P1A.500.A02 P1A.500.B01 P1A.500.D30 P1A.500.H49
P1A.500.H50 P1A.500.H55 P1A.500.H56 P1A.500.H67



P1A.536
Wall mounted glass tumbler and holder

- **Height: 108 mm**

P1A.536.A02 P1A.536.B01 P1A.536.D30 P1A.536.H49
P1A.536.H50 P1A.536.H55 P1A.536.H56 P1A.536.H67



P1A.517
Single robe hook

- **Length: 44 mm**

P1A.517.A02 P1A.517.B01 P1A.517.D30 P1A.517.H49
P1A.517.H50 P1A.517.H55 P1A.517.H56 P1A.517.H67

ACCESSORIES



P1A.504P

Single towel ring

- Ø170 mm

P1A.504P.A02 P1A.504P.B01 P1A.504P.D30 P1A.504P.H49
P1A.504P.H50 P1A.504P.H55 P1A.504P.H56 P1A.504P.H67



P1A.521/60

Single towel rail, fixed rail, large model

- 600 mm centres

P1A.521/60.A02 P1A.521/60.B01 P1A.521/60.D30 P1A.521/60.H49
P1A.521/60.H50 P1A.521/60.H55 P1A.521/60.H56 P1A.521/60.H67



P1A.521/45

Single towel rail, fixed rail, medium model

- 450 mm centres

P1A.521/45.A02 P1A.521/45.B01 P1A.521/45.D30 P1A.521/45.H49
P1A.521/45.H50 P1A.521/45.H55 P1A.521/45.H56 P1A.521/45.H67



P1A.564

Glass shelf with supports, large model

- SECURIT glass, 10 mm thick
- Length: 600 mm
- Depth: 139 mm

P1A.564.A02 P1A.564.B01 P1A.564.D30 P1A.564.H49
P1A.564.H50 P1A.564.H55 P1A.564.H56 P1A.564.H67



P1A.564/45

Glass shelf with supports, medium model

- SECURIT glass, 10 mm thick
- Length: 450 mm
- Depth: 119 mm

P1A.564/45.A02 P1A.564/45.B01 P1A.564/45.D30 P1A.564/45.H49
P1A.564/45.H50 P1A.564/45.H55 P1A.564/45.H56 P1A.564/45.H67



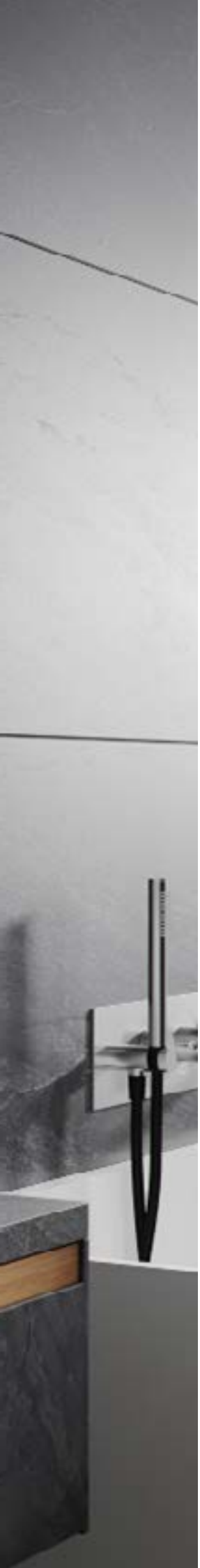

BASINS

CERAMIC COUNTERTOP BASINS



Rectangular ceramic on counter basin,
ext. dim. 58x37x13.5 cm, without overflow,
without waste

B20.V210.AW1

Glossy white

B20.V210.BM1

Matt white

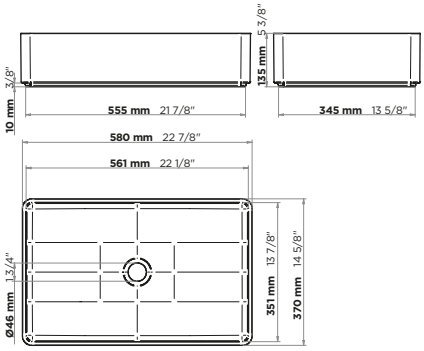



Square ceramic on counter basin,
ext. dim. 37x 37x 13.5cm, without overflow,
without waste

B20.V220.AW1

Glossy white

B20.V220.BM1

Matt white

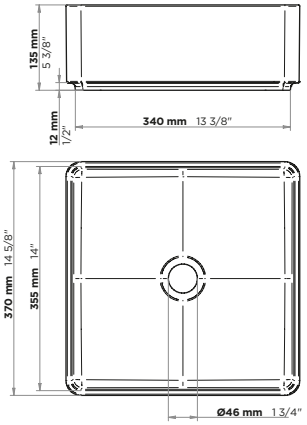



Round ceramic on counter basin,
ext. dim. Ø37x13.5cm, without overflow,
without waste

B20.V230.AW1

Glossy white

B20.V230.BM1

Matt white

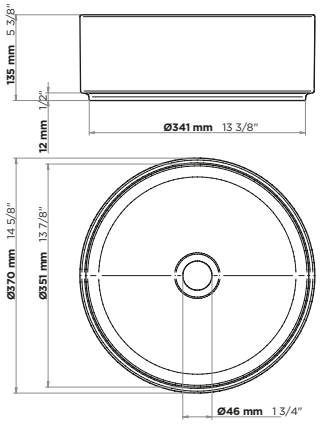



Round ceramic on counter basin,
Ø40x15cm, without overflow, without waste

B20.V232.AW1

Glossy white

B20.V232.BM1

Matt white

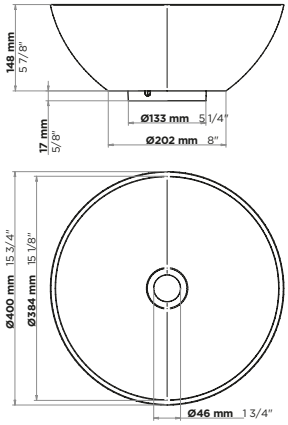

CERAMIC COUNTERTOP BASINS



Oval ceramic on counter basin,
ext. dim. 59x42x11.4cm, without overflow,
without waste

B20.V241.AW1

Glossy white

B20.V241.BM1

Matt white

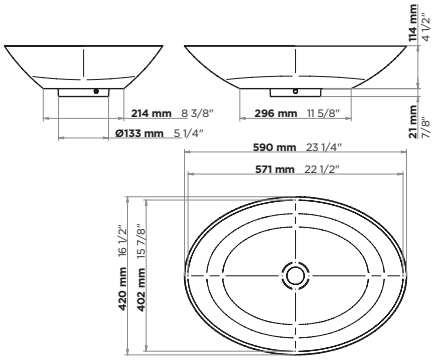



Rectangular rounded ceramic on counter basin,
63.5x 42.4x12cm, without overflow,
without waste

B20.V214.AW1

Glossy white

B20.V214.BM1

Matt white

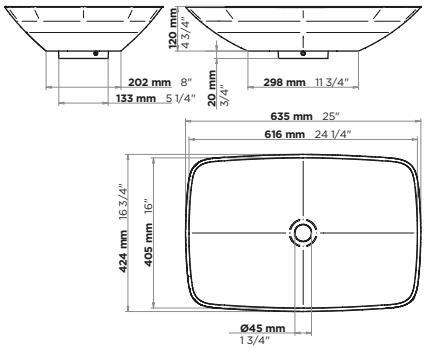



Rectangular ceramic on counter basin,
with 3-hole drilled rim, 60x46.2x12cm,
with overflow, without waste

B20.V215.AW1

Glossy white

B20.V215.BM1

Matt white

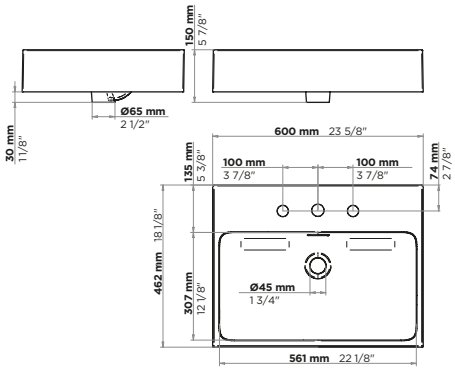



Oval ceramic on counter basin,
60x41.8x12cm, 3-hole drilled rim,
with overflow, without waste

B20.V242.AW1

Glossy white

B20.V242.BM1

Matt white

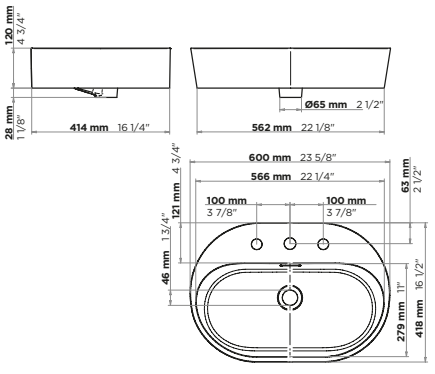

BUILT-IN CERAMIC BASINS



Rectangular ceramic under counter basin, int. dim. 48x 28x12cm, with overflow, without waste

B20.V110.AW1

Glossy white

B20.V110.BM1

Matt white

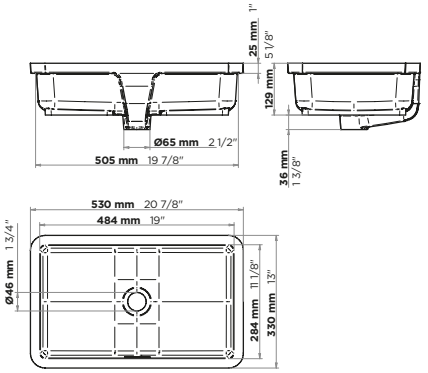



Rectangular ceramic basin for undermount installation, inside dimension 49x34.5x12cm, with overflow, without waste

B20.V111.AW1

Glossy white

B20.V111.BM1

Matt white

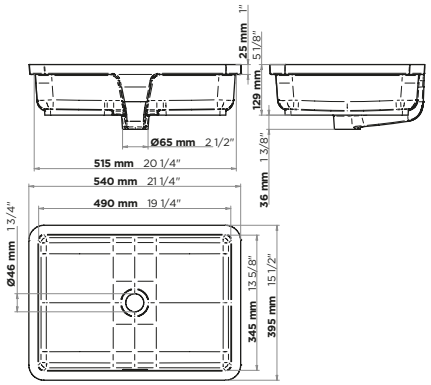



Round ceramic basin under counter, int. dim. Ø33x14cm, with overflow, without waste

B20.V120.AW1

Glossy white

B20.V120.BM1

Matt white

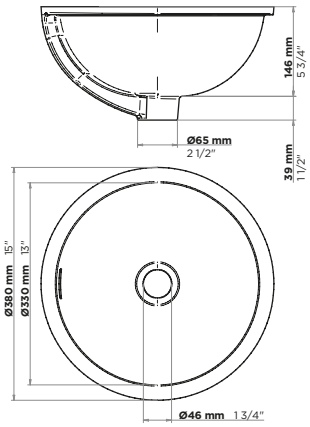



Oval ceramic under counter basin, int. dim. 42x29x12cm, with overflow, without waste

B20.V130.AW1

Glossy white

B20.V130.BM1

Matt white

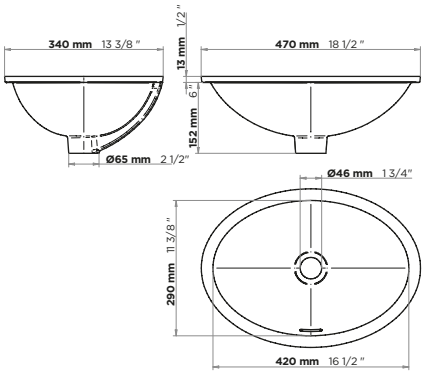

BUILT-IN CERAMIC BASINS



Oval ceramic under counter basin , int. dim. 52x36x15cm, with overflow, without waste

B20.V131.AW1
Glossy white

B20.V131.BM1
Matt white

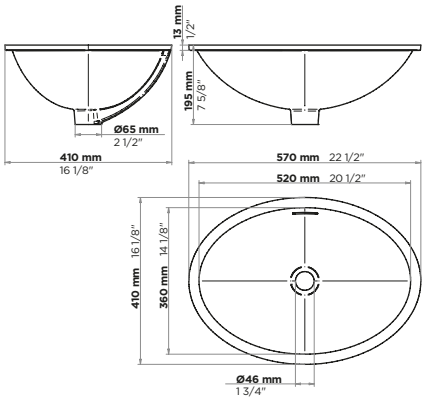





METAL COUNTERTOP BASINS



P00.V400BB

Round countertop basin, 304 stainless steel, 375mm - PVD brushed black - without overflow, without waste



P00.V400SS

Round countertop basin, 304 stainless steel, 375mm - brushed stainless steel - without overflow, without waste



P00.V400BG

Round countertop basin, 304 stainless steel, 375mm - PVD brushed Graphite - without overflow, without waste



P00.V400BL

Round countertop basin, 304 stainless steel, 375mm - PVD brushed Brass - without overflow, without waste



P00.V400BC

Round countertop basin, 304 stainless steel, 375mm - PVD brushed Copper - without overflow, without waste

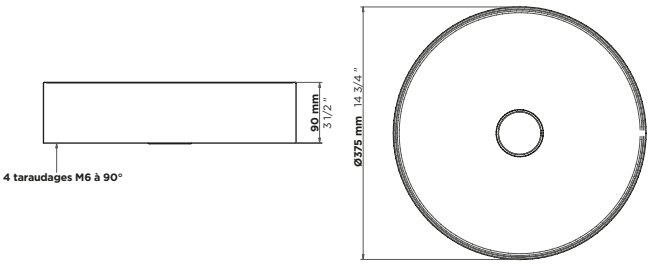

mm 53/8"
98 mm 37/8"
3/4"
3/4"
THG
THG



ROUGH PARTS

ROUGH PARTS

TECHNICAL INFORMATION



P00.40AM

Rough parts for wall-mounted 3-hole mixer, lever handle version

¾" water supply
Operating pressure: 2 at 3bar
Flowrate: 50 L/min at 3bar

ORDER THIS ROUGH PART WITH THE FOLLOWING PACKS:

BASIN PACK	PAGE
P1E.40SGB	21



P00.40AC

Rough parts for wall-mounted 3-hole mixer, cross handle version

¾" water supply
Operating pressure: 2 at 3bar
Flowrate: 50 L/min at 3bar

ORDER THIS ROUGH PART WITH THE FOLLOWING PACKS:

BASIN PACK	PAGE	BASIN PACK	PAGE	BASIN PACK	PAGE
P1C.40GB	68	P1B.40GB	111	P1A.40GB	154
P1C.40SGB	68	P1B.40SGB	111	P1A.40SGB	154



P00.6541SPA

Rough parts for concealed wall-mounted mixer with ½" outlet

½" water supply
Operating pressure: 2 at 3bar
Flowrate: 25 L/min at 3bar

ORDER THIS ROUGH PART WITH THE FOLLOWING PACKS:

BASIN PACK	PAGE	BASIN PACK	PAGE	BASIN PACK	PAGE	BASIN PACK	PAGE
P1E.6541SPBL	21	P1C.6541SPB	68	P1B.6541SPB	112	P1A.6541SPB	154
		P1C.6541SPBL	68	P1B.6541SPBL	112	P1A.6541SPBL	154
SHOWER PACK	**PAGE**	**SHOWER PACK**	**PAGE**	**SHOWER PACK**	**PAGE**	**SHOWER PACK**	**PAGE**
P1E.6571SPB	35	P1C.6571SPB	81	P1B.6571SPB	123	P1A.6571SPB	168
BIDET PACK	**PAGE**	**BIDET PACK**	**PAGE**	**BIDET PACK**	**PAGE**	**BIDET PACK**	**PAGE**
P1E.5840SPB	55	P1C.5840SPB	101	P1B.5840SPB	142	P1A.5840SPB	186

ROUGH PARTS

TECHNICAL INFORMATION



P00.6518SA

Built-in fixing plate for bath-shower mixer on column

½" water supply
Operating pressure: 2 at 3bar

ORDER THIS ROUGH PART WITH THE FOLLOWING PACKS:

BATH PACK	PAGE	BATH PACK	PAGE	BATH PACK	PAGE	BATH PACK	PAGE
P1E.6518SB	27	P1C.6518SB	72	P1B.6518SB	114	P1A.6518SB	156



P00.6550SPA

Rough parts for shower mixer with diverter

2- ½" outlet
½" water supply
Operating pressure: 2 at 3bar
Flowrate: 25 L/min at 3bar

ORDER THIS ROUGH PART WITH THE FOLLOWING PACKS:

BATH PACK	PAGE	BATH PACK	PAGE	BATH PACK	PAGE	BATH PACK	PAGE
P1E.6550RCSG	29	P1C.6550RCS	74	P1B.6550RCS	117	P1A.6550RCS	160
P1E.6550RBSG	29	P1C.6550RBS	74	P1B.6550RBS	117	P1A.6550RBS	160

SHOWER PACK	PAGE	SHOWER PACK	PAGE	SHOWER PACK	PAGE	SHOWER PACK	PAGE
P1E.6550R1C	35	P1C.6550R1C	81	P1B.6550R3C	123	P1A.6550R1C	168
P1E.6550R1B	35	P1C.6550R1B	81	P1B.6550R3B	123	P1A.6550R1B	168

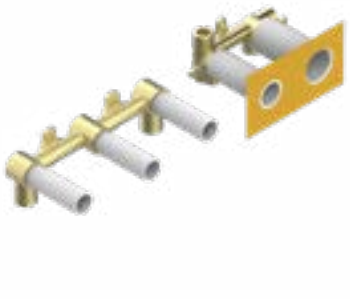

P00.40DMAM

Rough parts for wall-mounted 3 hole mixer, lever handle version

¾" water supply
Operating pressure: 2 at 3bar
Flowrate: 50 L/min at 3bar

Rough parts for hand shower supplied by mixer

½" outlet
½" water supply
Operating pressure: 2 at 3bar
Flowrate: 25 L/min at 3bar

ORDER THIS ROUGH PART WITH THE FOLLOWING PACKS:

BATH PACK	PAGE
P1E.41GM6561	29
P1E.41GM6571	29

ROUGH PARTS

TECHNICAL INFORMATION



P00.40DMAC

Rough parts for wall-mounted 3 hole mixer, cross handle version

¾" water supply
Operating pressure: 2 at 3bar
Flowrate: 50 L/min at 3bar

Rough parts for hand shower supplied by mixer

½" outlet
½" water supply
Operating pressure: 2 at 3bar
Flowrate: 25 L/min at 3bar

ORDER THIS ROUGH PART WITH THE FOLLOWING PACKS:

BATH PACK	PAGE	BATH PACK	PAGE	BATH PACK	PAGE
P1C.41G6561	74	P1B.41G6561	117	P1A.41G6561	160
P1C.41G6571	74	P1B.41G6571	117	P1A.41G6571	160

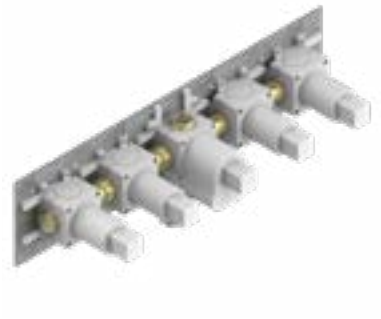

P00.THMV2X2

Rough parts for thermostatic bath mixer, medium flow rate, 2 functions
with connection for spout and hand shower

Hot/Cold water supply at the bottom of the thermostatic valve, 40mm centres, ¾"
Operating pressure: 2 at 3bar
Single-function flowrate: 40 L/min at 3bar
Handles up to 45 L/min at 3bar flow capacity

ORDER THIS ROUGH PART WITH THE FOLLOWING PACKS:

BATH PACK	PAGE	BATH PACK	PAGE	BATH PACK	PAGE	BATH PACK	PAGE
P1E.BTHV2X2L	30	P1C.BTHV2X2	75	P1B.BTHV2X2	118	P1A.BTHV2X2	161



P00.THMP2RX1

Rough parts for thermostatic mixer, medium flow rate, 2 functions,
push controls, 1 outlet on the right

Hot/Cold water supply at the bottom of the thermostatic valve, 40mm centres, ¾"
Operating pressure: 2 at 3bar
Single-function flowrate: 35 L/min at 3bar
Handles up to 45 L/min at 3bar flow capacity

ORDER THIS ROUGH PART WITH THE FOLLOWING PACKS:

BATH PACK	PAGE	BATH PACK	PAGE	BATH PACK	PAGE	BATH PACK	PAGE
P1E.P2RDSG	30	P1C.P2RDS	75	P1B.P2RDS	118	P1A.P2RDS	162
P1E.P2RDF	30	P1C.P2RDF	75	P1B.P2RDF	118	P1A.P2RDF	162
P1E.BTHP2RX1	30	P1C.BTHP2RX1	75	P1B.BTHP2RX1	118	P1A.BTHP2RX1	162

ROUGH PARTS

TECHNICAL INFORMATION



P00.THMV3R

Rough parts for thermostatic mixer, medium flow rate, 3 functions, thermostatic control on the left

Hot/Cold water supply at the bottom of the thermostatic valve, 40mm centres, ¾"
Operating pressure: 2 at 3bar
Single-function flowrate: 40 L/min at 3bar
Handles up to 45 L/min at 3bar flow capacity



P00.THMV3H

Rough parts for thermostatic mixer, medium flow rate, 3 functions, bottom thermostatic control



P00.THMV3L

Rough parts for thermostatic mixer, medium flow rate, 3 functions, thermostatic control on the right

ORDER THESE ROUGH PARTS WITH THE FOLLOWING PACKS:

BATH PACK	PAGE
P1E.V3MH5CSG	31
P1E.V3MH5BSG	31
P1E.V3MH6CSG	31
P1E.V3MH6BSG	31

BATH PACK	PAGE
P1C.V3MH5CS	76
P1C.V3MH5BS	76
P1C.V3MH6CS	76
P1C.V3MH6BS	76

BATH PACK	PAGE
P1B.V3MH7CS	119
P1B.V3MH7BS	119
P1B.V3MH8CS	119
P1B.V3MH8BS	119

BATH PACK	PAGE
P1A.V3MH5CS	163
P1A.V3MH5BS	163
P1A.V3MH6CS	163
P1A.V3MH6BS	163

SHOWER PACK	PAGE
P1E.V3MH5CL	44
P1E.V3MH5TL	44
P1E.V3MH5BL	44
P1E.V3MH6CL	44
P1E.V3MH6TL	44
P1E.V3MH6BL	44
P1E.V3MH9CL	45
P1E.V3MH9TL	45
P1E.V3MH9BL	45
P1E.V3MH9CJ	45
P1E.V3MH9TJ	45
P1E.V3MH9BJ	45
P1E.V3MH11C	46
P1E.V3MH11T	46
P1E.V3MH11B	46

SHOWER PACK	PAGE
P1C.V3MH5CL	90
P1C.V3MH5TL	90
P1C.V3MH5BL	90
P1C.V3MH6CL	90
P1C.V3MH6TL	90
P1C.V3MH6BL	90
P1C.V3MH9CL	91
P1C.V3MH9TL	91
P1C.V3MH9BL	91
P1C.V3MH9CJ	91
P1C.V3MH9TJ	91
P1C.V3MH9BJ	91
P1C.V3MH11C	92
P1C.V3MH11T	92
P1C.V3MH11B	92

SHOWER PACK	PAGE
P1B.V3MH7CL	133
P1B.V3MH7TL	133
P1B.V3MH7BL	133
P1B.V3MH8CL	133
P1B.V3MH8TL	133
P1B.V3MH8BL	133
P1B.V3MH10CL	134
P1B.V3MH10TL	134
P1B.V3MH10BL	134
P1B.V3MH10CK	134
P1B.V3MH10TK	134
P1B.V3MH10BK	134
P1B.V3MH11C	135
P1B.V3MH11T	135
P1B.V3MH11B	135

SHOWER PACK	PAGE
P1A.V3MH5CL	177
P1A.V3MH5TL	177
P1A.V3MH5BL	177
P1A.V3MH6CL	177
P1A.V3MH6TL	177
P1A.V3MH6BL	177
P1A.V3MH9CL	178
P1A.V3MH9TL	178
P1A.V3MH9BL	178
P1A.V3MH9CJ	178
P1A.V3MH9TJ	178
P1A.V3MH9BJ	178
P1A.V3MH11C	179
P1A.V3MH11T	179
P1A.V3MH11B	179

TECHNICAL INFORMATION



P00.THMP3RX1

Rough parts for thermostatic mixer, medium flow rate, 3 functions, push controls, 1 outlet on the right

Hot/Cold water supply at the bottom of the thermostatic valve, 40mm centres, ¾"
Operating pressure: 2 at 3bar
Single-function flowrate: 40 L/min at 3bar
Handles up to 45 L/min at 3bar flow capacity

ORDER THIS ROUGH PART WITH THE FOLLOWING PACKS:

BATH PACK	PAGE	BATH PACK	PAGE	BATH PACK	PAGE	BATH PACK	PAGE
P1E.P3MRX5SG	32	P1C.P3MRX5S	78	P1B.P3MRX7S	120	P1A.P3MRX5S	164
P1E.P3MRX5F	32	P1C.P3MRX5F	78	P1B.P3MRX7F	120	P1A.P3MRX5F	164
P1E.P3MRX5X	32	P1C.P3MRX5X	78	P1B.P3MRX7X	120	P1A.P3MRX5X	164
P1E.P3MRX6SG	32	P1C.P3MRX6S	78	P1B.P3MRX8S	120	P1A.P3MRX6S	164
P1E.P3MRX6F	32	P1C.P3MRX6F	78	P1B.P3MRX8F	120	P1A.P3MRX6F	164
P1E.P3MRX6X	32	P1C.P3MRX6X	78	P1B.P3MRX8X	120	P1A.P3MRX6X	164
SHOWER PACK	**PAGE**	**SHOWER PACK**	**PAGE**	**SHOWER PACK**	**PAGE**	**SHOWER PACK**	**PAGE**
P1E.P3MRX9L	47	P1C.P3MRX9L	93	P1B.P3MRX10K	137	P1A.P3MRX9L	181
P1E.P3MRX9J	47	P1C.P3MRX9J	93	P1B.P3MRX10L	137	P1A.P3MRX9J	181
P1E.P3MRX11	47	P1C.P3MRX11	93	P1B.P3MRX11	137	P1A.P3MRX11	181



P00.THMD2

Rough parts for thermostatic mixer, medium flow rate, 2-function diverter

Hot/Cold water supply at the bottom of the thermostatic valve, 40mm centres, ¾"
Operating pressure: 2 at 3bar
Flowrate: 35 L/min at 3bar

ORDER THIS ROUGH PART WITH THE FOLLOWING PACKS:

SHOWER PACK	PAGE	SHOWER PACK	PAGE	SHOWER PACK	PAGE	SHOWER PACK	PAGE
P1E.D2M1C	36	P1C.D2M1C	82	P1B.D2M3C	124	P1A.D2M1C	169
P1E.D2M1T	36	P1C.D2M1T	82	P1B.D2M3T	124	P1A.D2M1T	169
P1E.D2M1B	36	P1C.D2M1B	82	P1B.D2M3B	124	P1A.D2M1B	169
P1E.D2M2C	36	P1C.D2M2C	82	P1B.D2M4C	124	P1A.D2M2C	169
P1E.D2M2T	36	P1C.D2M2T	82	P1B.D2M4T	124	P1A.D2M2T	169
P1E.D2M2B	36	P1C.D2M2B	82	P1B.D2M4B	124	P1A.D2M2B	169

ROUGH PARTS

TECHNICAL INFORMATION



P00.THMV2H

Rough parts for thermostatic mixer, medium flow rate, 2 functions, top controls

Hot/Cold water supply at the bottom of the thermostatic valve, 40mm centres, ¾"
Operating pressure: 2 at 3bar
Single-function flowrate: 40 L/min at 3bar
Handles up to 45 L/min at 3bar flow capacity

ORDER THIS ROUGH PART WITH THE FOLLOWING PACKS:

SHOWER PACK	PAGE	SHOWER PACK	PAGE	SHOWER PACK	PAGE	SHOWER PACK	PAGE
P1E.V2MH5C	37	P1C.V2MH5C	83	P1B.V2MH10C	125	P1A.V2MH5C	170
P1E.V2MH5T	37	P1C.V2MH5T	83	P1B.V2MH10T	125	P1A.V2MH5T	170
P1E.V2MH5B	37	P1C.V2MH5B	83	P1B.V2MH10B	125	P1A.V2MH5B	170
P1E.V2MH6C	37	P1C.V2MH6C	83	P1B.V2MH7C	126	P1A.V2MH6C	170
P1E.V2MH6T	37	P1C.V2MH6T	83	P1B.V2MH7T	126	P1A.V2MH6T	170
P1E.V2MH6B	37	P1C.V2MH6B	83	P1B.V2MH7B	126	P1A.V2MH6B	170
P1E.V2MH9C	38	P1C.V2MH9C	84	P1B.V2MH8C	126	P1A.V2MH9C	171
P1E.V2MH9T	38	P1C.V2MH9T	84	P1B.V2MH8T	126	P1A.V2MH9T	171
P1E.V2MH9B	38	P1C.V2MH9B	84	P1B.V2MH8B	126	P1A.V2MH9B	171



P00.THMV2RX1

Rough parts for thermostatic mixer, medium flow rate, 2 functions, 1 outlet on the right

Hot/Cold water supply at the bottom of the thermostatic valve, 40mm centres, ¾"
Operating pressure: 2 at 3bar
Single-function flowrate: 40 L/min at 3bar
Handles up to 45 L/min at 3bar flow capacity

ORDER THIS ROUGH PART WITH THE FOLLOWING PACKS:

SHOWER PACK	PAGE	SHOWER PACK	PAGE	SHOWER PACK	PAGE	SHOWER PACK	PAGE
P1E.V2MRX5	39	P1C.V2MRX5	85	P1B.V2MRX7	128	P1A.V2MRX5	172
P1E.V2MRX6	39	P1C.V2MRX6	85	P1B.V2MRX8	128	P1A.V2MRX6	172
P1E.V2MRX9	39	P1C.V2MRX9	85	P1B.V2MRX10	128	P1A.V2MRX9	172

ROUGH PARTS

TECHNICAL INFORMATION



P00.THM2VA

Rough parts for thermostatic mixer, medium flow rate
and two independent ¾" wall-mounted valves

Hot/Cold water supply at the bottom of the thermostatic valve, 40mm centres, ¾"
Operating pressure: 2 at 3bar
Single-function flowrate: 40 L/min at 3bar
Handles up to 45 L/min at 3bar flow capacity

ORDER THIS ROUGH PART WITH THE FOLLOWING PACKS:

SHOWER PACK	PAGE	SHOWER PACK	PAGE	SHOWER PACK	PAGE	SHOWER PACK	PAGE
P1E.BV2M1C	40	P1C.BV2M1C	86	P1B.BV2M3C	129	P1A.BV2M1C	173
P1E.BV2M1T	40	P1C.BV2M1T	86	P1B.BV2M3T	129	P1A.BV2M1T	173
P1E.BV2M1B	40	P1C.BV2M1B	86	P1B.BV2M3B	129	P1A.BV2M1B	173
P1E.BV2M2C	40	P1C.BV2M2C	86	P1B.BV2M4C	129	P1A.BV2M2C	173
P1E.BV2M2T	40	P1C.BV2M2T	86	P1B.BV2M4T	129	P1A.BV2M2T	173
P1E.BV2M2B	40	P1C.BV2M2B	86	P1B.BV2M4B	129	P1A.BV2M2B	173
P1E.BV2M9C	41	P1C.BV2M9C	87	P1B.BV2M10C	130	P1A.BV2M9C	174
P1E.BV2M9T	41	P1C.BV2M9T	87	P1B.BV2M10T	130	P1A.BV2M9T	174
P1E.BV2M9B	41	P1C.BV2M9B	87	P1B.BV2M10B	130	P1A.BV2M9B	174



P00.THMP2H

Rough parts for thermostatic mixer, medium flow rate, 2 functions, push controls at the top

Hot/Cold water supply at the bottom of the thermostatic valve, 40mm centres, ¾"
Operating pressure: 2 at 3bar
Single-function flowrate: 35 L/min at 3bar
Handles up to 45 L/min at 3bar flow capacity

ORDER THIS ROUGH PART WITH THE FOLLOWING PACKS:

SHOWER PACK	PAGE	SHOWER PACK	PAGE	SHOWER PACK	PAGE	SHOWER PACK	PAGE
P1E.P2MH1C	42	P1C.P2MH1C	88	P1B.P2MH3C	131	P1A.P2MH1C	175
P1E.P2MH1T	42	P1C.P2MH1T	88	P1B.P2MH3T	131	P1A.P2MH1T	175
P1E.P2MH1B	42	P1C.P2MH1B	88	P1B.P2MH3B	131	P1A.P2MH1B	175
P1E.P2MH2C	42	P1C.P2MH2C	88	P1B.P2MH4C	131	P1A.P2MH2C	175
P1E.P2MH2T	42	P1C.P2MH2T	88	P1B.P2MH4T	131	P1A.P2MH2T	175
P1E.P2MH2B	42	P1C.P2MH2B	88	P1B.P2MH4B	131	P1A.P2MH2B	175
P1E.P2MH9C	43	P1C.P2MH9C	89	P1B.P2MH10C	132	P1A.P2MH9C	176
P1E.P2MH9T	43	P1C.P2MH9T	89	P1B.P2MH10T	132	P1A.P2MH9T	176
P1E.P2MH9B	43	P1C.P2MH9B	89	P1B.P2MH10B	132	P1A.P2MH9B	176

ROUGH PARTS

TECHNICAL INFORMATION



P00.THMV3RX1

Rough parts for thermostatic mixer, medium flow rate, 3 functions, 1 outlet on the right

Hot/Cold water supply at the bottom of the thermostatic valve, 40mm centres, ¾"
Operating pressure: 2 at 3bar
Single-function flowrate: 40 L/min at 3bar
Handles up to 45 L/min at 3bar flow capacity

ORDER THIS ROUGH PART WITH THE FOLLOWING PACKS:

SHOWER PACK	PAGE	SHOWER PACK	PAGE	SHOWER PACK	PAGE	SHOWER PACK	PAGE
P1E.V3MRX9L	48	P1C.V3MRX9L	95	P1B.V3MRX10K	136	P1A.V3MRX9L	180
P1E.V3MRX9J	48	P1C.V3MRX9J	95	P1B.V3MRX10L	136	P1A.V3MRX9J	180
P1E.V3MRX11	48	P1C.V3MRX11	95	P1B.V3MRX11	136	P1A.V3MRX11	180

MISCELLANEOUS



P00.THAL20

20 mm extension set for thermostatic mixer control

ORDER THIS EXTENSION WITH THE FOLLOWING ROUGH PARTS:

ROUGH PARTS	PAGE	ROUGH PARTS	PAGE	ROUGH PARTS	PAGE	ROUGH PARTS	PAGE
P00.THMV2X2	202	P00.THMV3H	203	P00.THMD2	204	P00.THM2VA	206
P00.THMP2RX1	202	P00.THMV3L	203	P00.THMV2H	205	P00.THMP2H	206
P00.THMV3R	203	P00.THMP3RX1	204	P00.THMV2RX1	205	P00.THMV3RX1	207



P00.5598

Tank to install under the tub
for shower hose

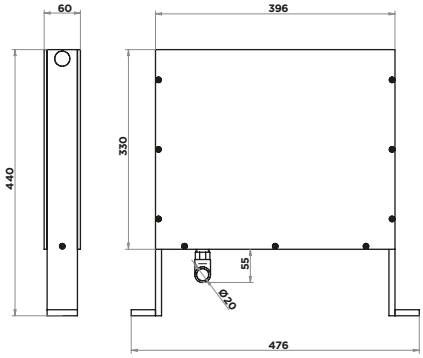

ORDER THIS TANK WITH THE FOLLOWING BATH SETS:

BATH SETS	PAGE	BATH SETS	PAGE	BATH SETS	PAGE	BATH SETS	PAGE
P1E.1132SG	26	P1C.112BSGBB	71	P1C.1132SG	71	P1A.112BSGBH	156
P1C.112BSGBH	71	P1C.1132SGH	71	P1B.1132SG	114	P1A.1132SGH	156

CONTACT

HEAD OFFICE

THG PARIS
35, rue Tournière
80130 Béthencourt-sur-Mer
France
+33 (0)3 22 60 20 80
contact@thg.fr
www.thg-paris.com

Discover the **AQUARA** range on our website
WWW.AQUARA-THG.FR

For further information:
aquara@thg.fr

DESIGN AND PRODUCTION
THG Paris

AQUARA is a registered trademark of THG Paris.

Texts, technical drawings and photos are not contractually binding. In the interests of continuous improvement, our products are subject to change without notice.

© THG Paris - October 2026

PRINTED IN FRANCE BY
Imprimerie Jean Bernard

GENERAL TERMS AND CONDITIONS OF SALE

1 - CONDITIONS

Our sales are made under these general conditions and any contrarycondition that may be stipulated by the purchaser, in particular in its own general conditions of purchase, are cancelled by these and deemed non-written in our respect.

The purchaser's order is made, as of right, under these general conditions of sale from the moment that it has received special communication of these before the order or read these at the time of a previous purchase. If this is not the case, the purchaser has a barring time limit of 5 full days from the sending of our registered letter with acknowledgement of receipt to inform us of its contestation of any of our general conditions of sale; and in this case we are released from all our commitments in relation to this order.

Our products may be modified or their sale ceased at any time. Consequently, any information of any type whatsoever given in our catalogues, leaflets or advertising material is given as an indication only and does not commit us.

2 - ORDER TAKING

The orders sent directly by the customers or taken from them by our representatives are always understood to be subject to our acceptance; this may be express acceptance by our acknowledgement of receipt or tacit acceptance by our failure to send a letter of reserve or a refusal within 15 days of receipt of this order at our head office. No order thus accepted by us can be withdrawn or cancelled by the customer. Beyond 48 hours, any request for change concerning an order that has already been recorded, is only effective after acceptance by our technical services and will lead to a price increase.

Requests for credit notes on returning a brand new product will need to be sent to our technical services for acceptance and definition of the discount to apply. The models or drawings are communicated to the customer confidentially.They remain our property and must be returned to us at first request.

In the case of special manufacture according to the customer's indications, the latter is the sole liable for any penalty under third party rights and formally guarantees us in this respect.

For these special manufactures, we reserve a margin of + or - 10% of the ordered quantity. In the case of parts supplied by the customer for treatment which were not manufactured by THG, THG cannot guarantee the final result and shall not be held liable in the case of loss, damage or destruction of the parts. In no event shall the customer be able to claim damages.

3 - PRICE

The products are supplied at the price in force at the time when the order is placed. The prices are understood to be net ex-factory. All taxes, duties or other such charges to be paid in application of French regulations, or those of an importing or a transit country, are payable by the purchaser.

4 - AVAILABILITY PERIOD FOR SPARE PARTS

Spare parts will be available for a minimum of five years from the date on which the product is discontinued. In the event of a shortage of parts prior to the above-mentioned period, and if no replacement with an identical product is possible, THG reserves the right to offer a paid replacement with a model that is at least equivalent to the product to be repaired. The Customer's refusal of this proposal shall in no way entitle them to compensation from THG.

5 - PAYMENTS

Unless special written conditions, our invoices are payable by bank transfer before delivery. There is no reduction for payment before due date. In accordance with the article "L.4416" drawn from the French commercial law, delay penalties are owed for lack of payment the day after the date of payment indicated on the invoice. The interest rate of those delay penalties amounts to three times the legal French interest rate.

6 - DELIVERIES

Our delivery times are only given as an indication and any late delivery by us cannot justify a cancellation of the order or the replacement by the purchaser, or constitute a reason for penalty or damages. Even in the event that a delivery time has been expressly accepted by us, we shall, nonetheless, be released as of right from any obligation in this respect in the case of force majeure or an event such as complete or partial strike, flooding, fire, war, etc., leading to a complete or partial ceasing of our activities or our own suppliers' manufactures or deliveries. The purchaser shall be notified by us, as soon as possible, of the occurrence of an aforesaid case or event and if the period of delivery suspension is more than three months from this notification, each party shall be able to terminate the order without indemnity on either side.

7 - RECEPTION

When the delivery is handed over by the carrier, the purchaser must carefully verify the merchandise and make, in the legal forms and time limits, all reserves and apply due diligence to ensure we retain the right to recourse against the carrier and notify us immediately.

As regards the conformity and apparent quality of the delivered merchandise in relation to that ordered, the purchaser must send us any complaints in writing at the latest within a barring time limit of eight days of receipt. Any complaint shall only be taken into account if the merchandise is still in the same condition as on delivery.

8 – GUARANTEE

THG guarantees its products and accessories against any manufacturing faults, material or surface defects which have occured prior to delivery. If the products subsequently prove to be unfit for purpose, the guarantee will take effect from the date of invoice:

- Brassware products and accessories: 5 years. The guarantee is limited to 1 year for all coatings other than Chrome and PVD finishes.
- Sanitaryware: 5 years (except electronic components).
- Towel warmer: 5 years. The guarantee is limited to 1 year for all coatings other than Chrome and PVD finishes, and 2 years for electrical components.
- electrical and electronic components: 2 years. Applies to electronic taps, electric towel warmers, whirlpool systems and accessories such as illuminated mirrors.

Exclusions to the THG guarantee:

The THG guarantee only covers our brassware and sanitaryware products if:

- they have been installed by qualified professionals in compliance with our installation instructions and in accordance with any applicable professional standards and regulations;
- they are used for their intended purpose, following the user instructions;
- they are maintained (such as joint replacement, filter cleaning, limescale removal, lubrication etc.) by appropriately qualified persons.

The durabililty of the colour plating depends on the strict adherence to the maintenance instructions that are provided with the products. The outer coating of some of our products may change slightly, due to the manual finishing process and the natural patina of certain finishes. However, the THG guarantee does not cover any damage linked to:

- everyday use or wear caused by foreign bodies transported by water in our sanitaryware (sand, fillings) and moving parts: diverters, valve heads, ceramic cartridges, thermostatic components;
- freezing temperatures and any resulting damage;
- accidental knocks, intentional or otherwise;
- the use of corrosive or abrasive cleaning products;
- any form of abnormal use or causing of external deterioration;
- the prolongued storage in conditions not suitable for the durability of the plating (e.g: humidity, temperature)

Any fitting whose original surface coating has been modified, shall be automatically excluded from the guarantee.

9 - RETURNS

Conditions and consequences of the implementation of the guarantee. To benefit from the guarantee, the user must, without delay when the defect occurs, contact his direct supplier who will pass him on, if need be, to THG. The THG guarantee, in the event that it is accepted by our departments, shall be limited to the repair or replacement by the said departments of only the materials or parts that we have acknowledged to be defective, expressly excluding all incidental costs (in particular the mounting or demounting) and direct and indirect damage, in particular consecutive to de-privation of enjoyment of the installations.

The user shall give THG the time necessary to identify and eliminate the defect. Failing this, THG shall automatically be released from its guarantee obligations. Moreover the recessed fittings must be executed in such a way that the THG taps, valves and fittings can be removed with causing any damage. Failing this, THG shall be released from its guarantee obligations. For the bath taps, valves and fittings, an inspection flap is obligatory to enable easy intervention in the case of dysfunctioning of the said products. Generally, THG shall in no case be held liable in respect to professional users and customers for damage caused by any products that are defective in relation to their professional installations. The application of the guarantee does not have the effect of extending its duration.

Payments cannot be postponed for any reason whatsoever, even in the case of dispute, and in the event of late payment, we have the right, by simple notification to the purchaser, to cancel the other orders in progress or suspend their execution, or to request guarantees or payment before delivery.

10 - RESERVATION OF OWNERSHIP

Our sales are executed on delivery of the merchandise but ownership is only transferred to the purchaser after full effective payment of the price.

Risks are transferred on delivery and the purchaser must insure the merchandise against all risks, including exceptional circumstance and force majeure. The purchaser and its insurer abandon in advance any recourse against the vendor.

THG authorises the resale of the delivered material before full payment of the price but, nonetheless, does not abandon its right to exercise its right of ownership and, consequently, reserves the right to take back, in the case of non-payment of all or part of the price payable or become payable, the material under its brand still in stock at the time of the failure to perform. The material taken back can be any item of the stock from THG, even if it is not the material concerned by the non- payment.

Failing material still in stock on the purchaser's premises, THG shall be able to seek, by any means at its convenience, the subpurchasers of its merchandise to request from them the payment of the said merchandise, the transfer of any amount receivable by our main debtor being automatically acquired by THG in the case of the application of this clause.

When the THG material is resold with other merchandise that does not belong to us, our customer is deemed to have transferred its amount receivable to us but only up to the amount of the price or part of the price of our merchandise remaining unpaid.

In the case of non-payment of all or part of the price on its due date, it is the responsibility of THG to exercise, according to its wishes, following simple notification, its right to claim.

When this right is exercised any outstanding amounts become immediately payable, with the payment of interest for late payment due as of the date of payability and without there being the need for any formal notification. The said interest is calculated at the legal interest rate plus 50%, with payability of all costs whatsoever incurred to achieve the effective recovery.

The sale is only cancelled in the following conditions: failure by the purchaser to perform its obligations or to take advantage of the right to cancel the sale; 3 days after a registered letter is sent with acknowledgement of receipt formally asking the purchaser to pay the prix or the balance of the price, along with the aforesaid interest and costs, the said letter having no effect; or the simple fact that the notice to perform was not followed by the execution of its obligations by the purchaser In all cases of cancellation, the payments on account remain acquired by THG both on the grounds of the loss in value of the products and on the grounds of the penalty clause and subject to all other damages, if appropriate, in particular due to formalities and friendly negotiations which may have been necessary for recovery.

11 - COMPETENCE - DISPUTE

In the case of dispute or litigation between the parties, only the Commercial Court in Amiens (80) - France shall be competent.

This clause shall apply even in the case of urgent proceedings, additional application or more than one defendant and whatever the method and conditions of payment. Our bills do not make any exception or modification to this clause



AQUARA
by THG Paris

WWW.AQUARA-THG.FR

